E30078

2-way mounting device for process sensors

MOUNTIG DEVICE 2 WAY

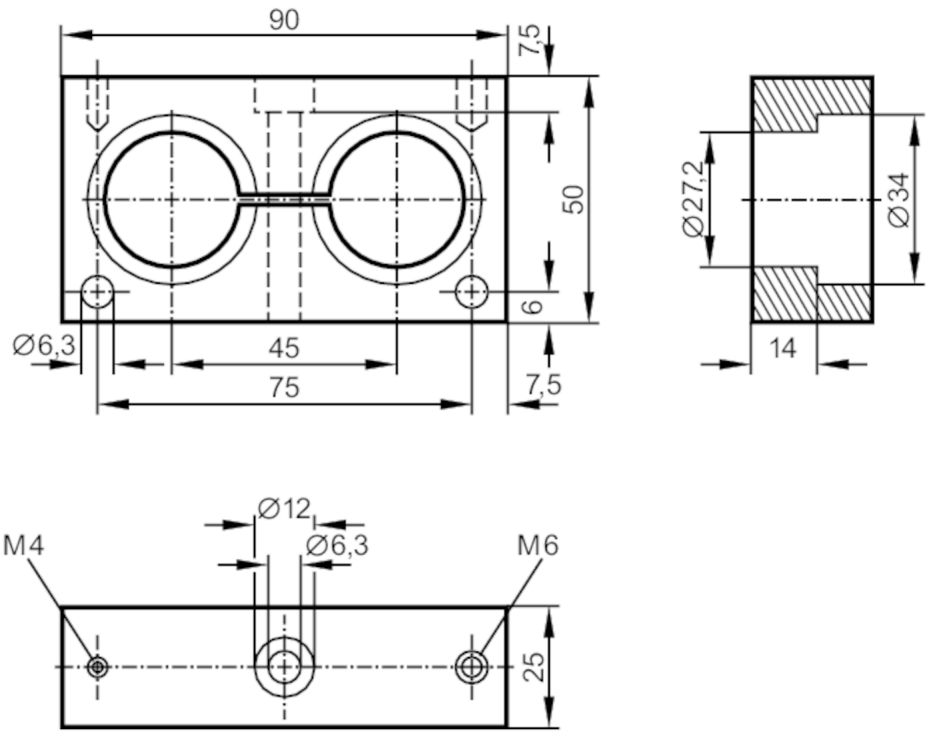

Application		
Design		for fluid sensors
Mechanical data		
Weight	[g]	124.5
Materials		POM
Accessories		
Items supplied		head cap screw: 1 x M6 x 60, ISO 4762
		head cap screw: 1 x M4 x 8, ISO 4762
		head cap screw: 1 x M6 x 8, ISO 4762
		set screw: 1 x M6 x 16, DIN 913
Remarks		
Pack quantity		1 pcs.