SUH420

Ultrasonic flow meter

SUC50XJBFRKG/US

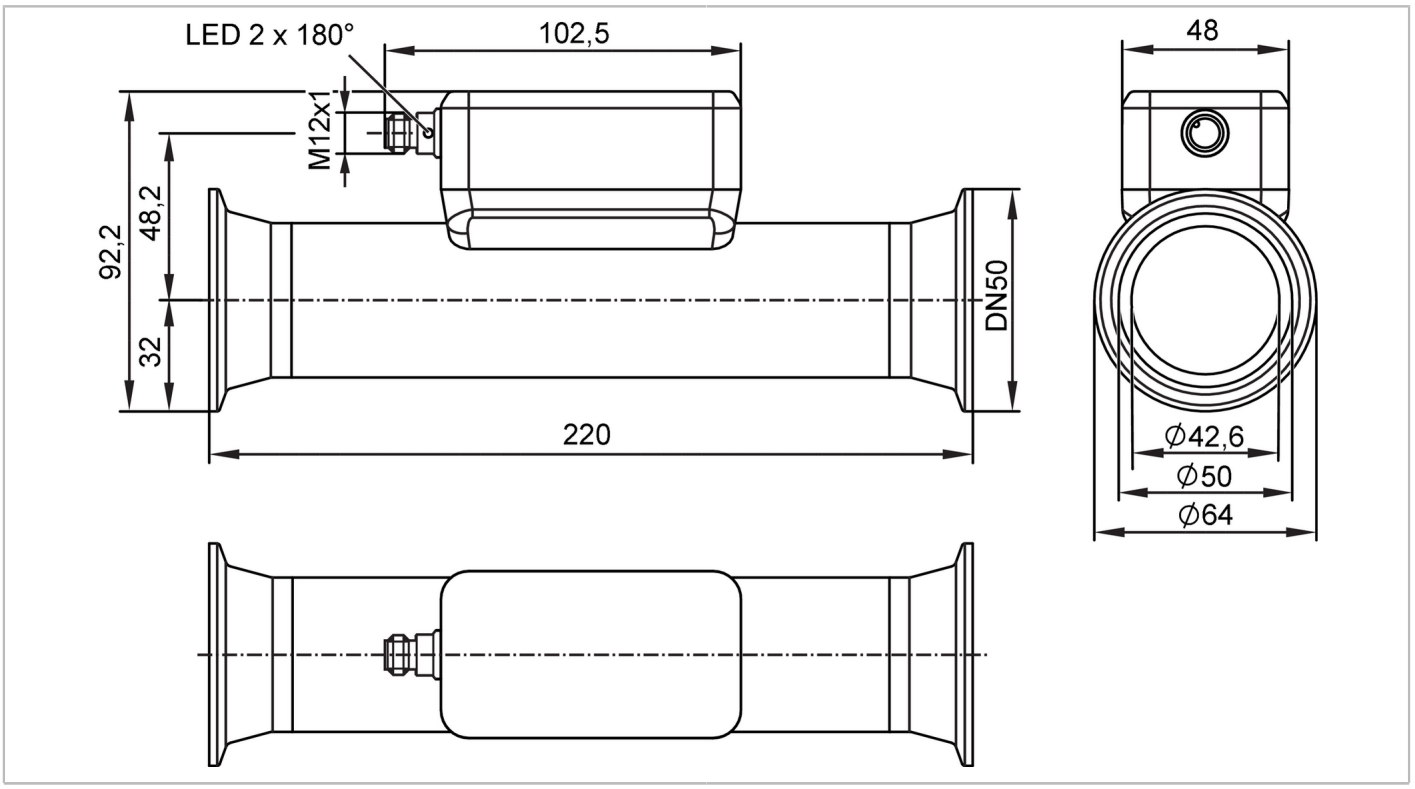

ACS CE c UL us LISTED EC 1935/2004 FCM FDA IO-Link KTW/W270 Reg31

Product characteristics					
Measuring range		5...1000 l/min	0.3...60 m³/h	79...15850 gph	1.32...264.18 gpm
Nominal diameter		DN50 (2“)			
Process connection		Clamp DN50 DIN 32676 series A			
Application					
Special feature		gold-plated contacts			
Application		food and beverage industry			
Media		ultra-pure water; water; water-based media; edible oils			
Note on media		water-based media: for media with >10 % additives, the repeatability is the only available value			
		edible oils: palm oil, soy oil, rapeseed oil, sunflower oil, peanut oil, olive oil and others			
Medium temperature	[°C]	-40...130; (< 1 h: 150)			
Min. burst pressure		75 bar		7.5 MPa	
Pressure rating		25 bar		2.5 MPa	
Note on pressure rating		take into account the pressure resistance of the bracket and the seal used for clamp connection			
Vacuum resistance	[mbar]	-1000			
Electrical data					
Operating voltage	[V]	18...32 DC; (to SELV/PELV)			
Current consumption	[mA]	< 75			
Protection class		III			
Reverse polarity protection		yes			
Power-on delay time	[s]	5			
Measuring principle		ultrasonic			

SUH420

Ultrasonic flow meter

SUC50XJBFRKG/US

Inputs / outputs				
Total number of inputs and outputs	2			
Inputs				
Inputs	OUT2		counter reset	
Outputs				
Total number of outputs	2			
Output signal	OUT1		switching signal; pulse signal; diagnostic signal; totalizer switching signal; frequency signal; IO-Link	
	OUT2		switching signal; pulse signal; diagnostic signal; totalizer switching signal; analog signal	
Electrical design	PNP/NPN			
Pulse output	flow rate meter			
Short-circuit protection	yes			
Type of short-circuit protection	yes (non-latching)			
Overload protection	yes			
Analog				
Number of analog outputs	1			
Analog current output [mA]	4...20			
Max. load [Ω]	500			
Digital				
Number of digital outputs	2			
Output function	normally open / closed; (configurable)			
Max. voltage drop switching output DC [V]	2			
Permanent current rating of switching output DC [mA]	100			
Switching frequency DC [Hz]	0...10000			
Measuring/setting range				
Measuring range	5...1000 l/min	0.3...60 m³/h	79...15850 gph	1.32...264.18 gpm
Resolution	0.1 l/min	0.001 m³/h	1 gph	0.01 gpm
Note on factory setting	l/min, °C			
Set point SP	10.5...1000 l/min	0.63...60 m³/h	166...15850 gph	2.77...264.17 gpm
Reset point rP	5.3...994.8 l/min	0.318...59.688 m³/h	84...15768 gph	1.4...262.8 gpm
Analog start point ASP	-1000...800 l/min	-60...48 m³/h	-15850...12680 gph	-264.17...211.34 gpm
Analog end point AEP	-800...1000 l/min	-48...60 m³/h	-12680...15850 gph	-211.34...264.17 gpm
Low flow cut-off LFC	5...50 l/min	0.3...3 m³/h	79...793 gph	1.32...13.21 gpm
Frequency end point, FEP	200.6...1000 l/min	12.037...60 m³/h	3180...15850 gph	53...264.17 gpm
Frequency at the end point FRP [Hz]	1...10000			
Volumetric flow quantity monitoring				
Pulse length [s]	0.002...2			
Pulse value	0.1...99990000 l; 0.026…26414563.515 gal			

SUH420

Ultrasonic flow meter

SUC50XJBFRKG/US

Temperature monitoring			
Measuring range		-40...130 °C	-40...266 °F
Resolution		0.1 °C	0.1 °F
Set point SP		-39.4...130 °C	-38.9...266 °F
Reset point rP		-40...129.4 °C	-40...264.9 °F
Analog start point		-40...96 °C	-40...204.8 °F
Analog end point		-6...130 °C	21.2...266 °F
Frequency start point, FSP		-40...96 °C	-40...204.8 °F
Frequency end point, FEP		-6...130 °C	21.2...266 °F
Frequency at the end point FRP	[Hz]	1...10000	
Accuracy / deviations			
Accuracy (in the measuring range)		only up to 100 °C; at higher temperatures, only the repeatability is within the specification.	
Flow monitoring			
Accuracy (in the measuring range)		edible oils	± (5,0 % MW + 1,0 % MEW)
		water	± (1,0 % MW + 0,5 % MEW)
Repeatability		± 0,2 % MEW	
Temperature monitoring			
Accuracy	[K]	± 2,5 (Q > 5 % MEW)	
Temperature coefficient	[% of the span / 10 K]	0,2	
Reaction times			
Flow monitoring			
Response time	[s]	< 0.25; (dAP = 0, T09)	
Damping process value dAP	[s]	0...5	
Temperature monitoring			
Dynamic response T05 / T09	[s]	5,7 / 86	
Software / programming			
Diagnostic functions		direction of flow detection; signal quality	
Interfaces			
Communication interface		IO-Link	
Transmission type		COM2 (38,4 kBaud)	
IO-Link revision		1.1.3	
SDCI standard		IEC 61131-9: 2013-07	
Profiles		BLOB	Binary Large Object transfer
		Common - I&D	Identification and Diagnosis
Required master port class		A	
Process data analog		3	
Process data binary		2	
Min. process cycle time	[ms]	9.6	

SUH420

Ultrasonic flow meter

SUC50XJBFRKG/US

IO-Link process data (cyclical)		**Function**	**bit length**
		totalizer	32
		Flow monitoring	32
		Temperature monitoring	32
		status	4
		Output 1	1
		Output 2	1
Supported DeviceIDs		**Type of operation**	**DeviceID**
		default	1911
Operating conditions			
Ambient temperature	[°C]	-20...60	
Storage temperature	[°C]	-25...80	
Protection		IP 69; (DIN EN 60529)	
Tests / approvals			
EMC		DIN 61326-1:2021	
Shock resistance		DIN IEC 68-2-27	20 g (11ms)
Vibration resistance		DIN IEC 68-2-6	20 g (10...2000Hz)
MTTF	[years]	136	
UL approval		UL approval number	I038
		File number UL	E174189
Pressure equipment directive		can be used for group 2 fluids; group 1 fluids on request	
Mechanical data			
Weight	[g]	921	
Housing		rectangular	
Inlet pipe length		5 x DN	
Outlet pipe length		1 x DN	
Dimensions	[mm]	220 x 64 x 92.2	
Material		housing: stainless steel (1.4404 / 316L); connector: PEI, FKM	
Materials (wetted parts)		Pipe section: stainless steel (1.4435 / 316L); Process connection: stainless steel (1.4404 / 316L)	
Nominal diameter		DN50 (2“)	
Process connection		Clamp DN50 DIN 32676 series A	
Process connection suitable for pipe standard		DN50 / Ø 53 mm x 1,5 mm; (DIN 11866 series A); (DIN EN 10357 series A)	
Surface characteristics Ra/Rz of the wetted parts		Ra < 0.4 µm (16 µin); Rz = 4 µm (157 µin)	
Displays / operating elements			
Display		operating status	1 x LED, green
Accessories			
Items supplied		package insert	
Remarks			
Remarks		MW = Measured value	
		MEW = Final value of the measuring range	
		pulse and totalizer signal are only available for one of the two outputs	
		the specified surface characteristics Ra/Rz of the wetted surfaces do not apply to the weld seam.	
Pack quantity		1 pcs.	

SUH420

Ultrasonic flow meter

SUC50XJBFRKG/US

Electrical connection - plug

Connector: 1 x M12; coding: A; Contacts: gold-plated

Connection

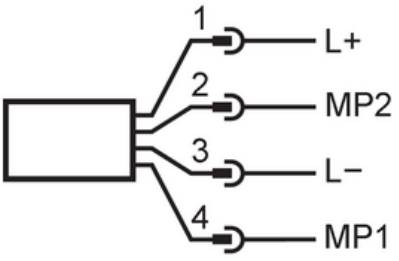

1 (L+)	L+	
2 (OUT2)	MP2	DO2, AO, DI
3 (L-)	L-	
4 (OUT1)	MP1	DO1, FO, IO-Link

AO: analog output; DI: digital input; DO: digital output; FO: Frequency output; MP: multi-function connection

Diagrams and graphs

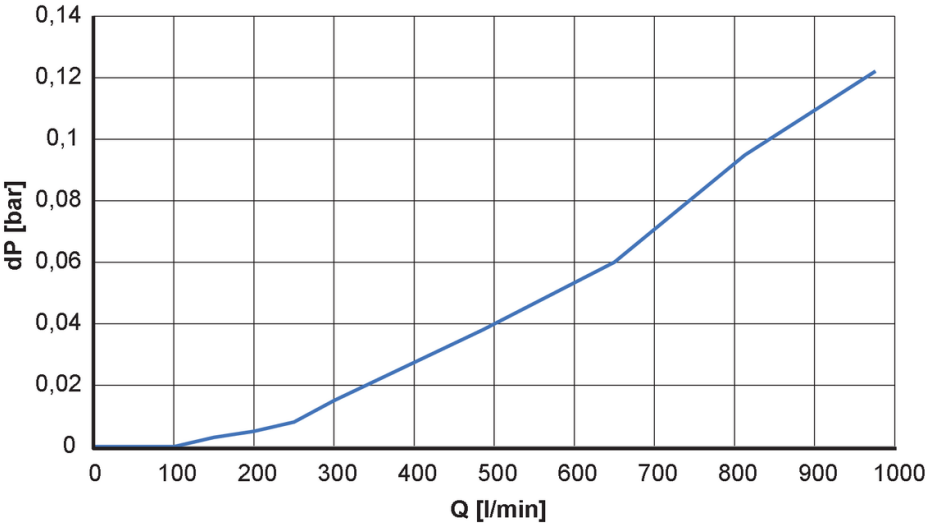

dP [bar] Pressure loss

Q [l/min] volumetric flow quantity