SU2030

Ultrasonic flow meter

SUR21XFBFRKG/US

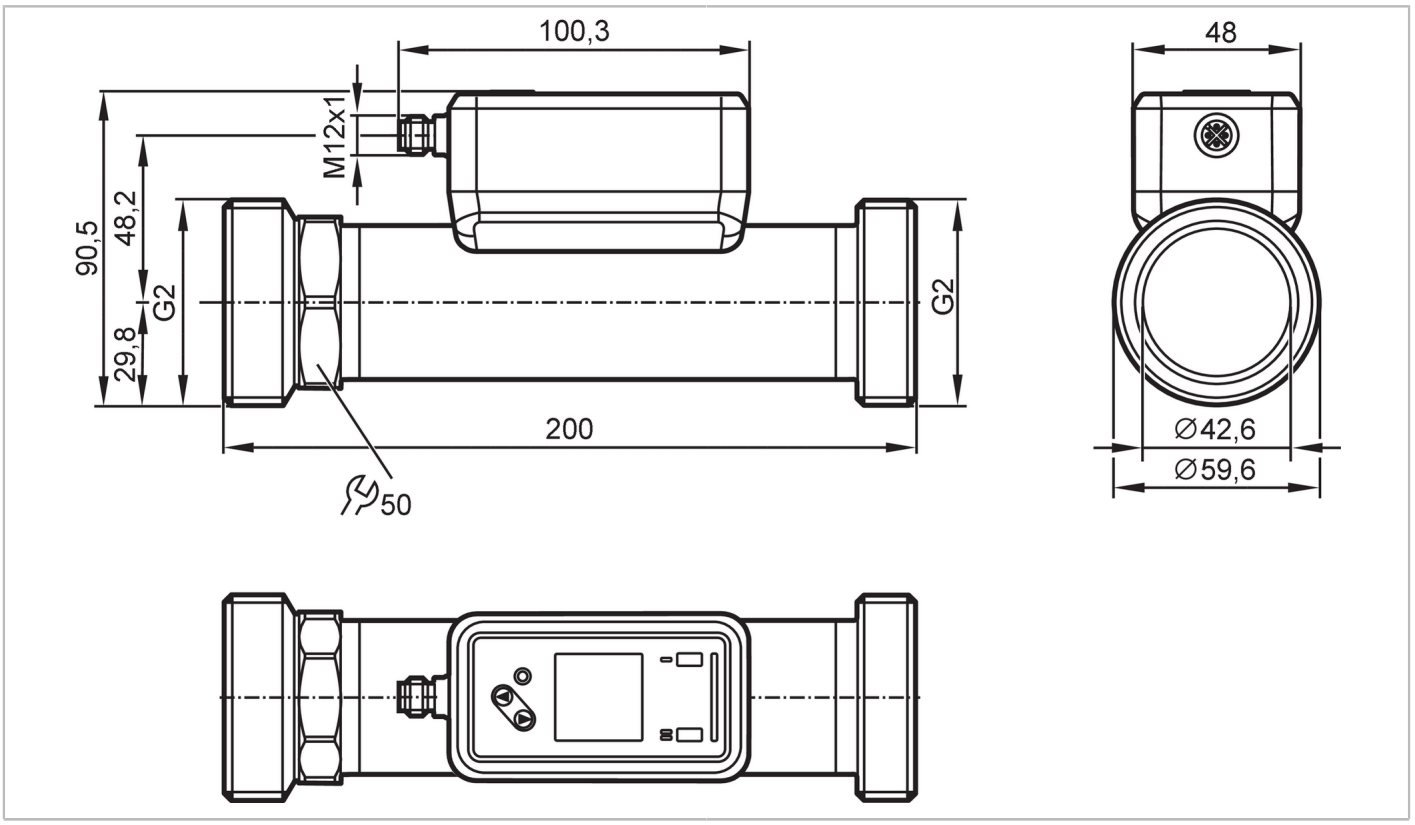

ACS CE c UL us LISTED IO-Link KTW/W270 Reg31

Product characteristics					
Measuring range		5...1000 l/min	300...60000 l/h	0.058...11.666 m/s	0.3...60 m³/h
Process connection		threaded connection G 2 external thread DN50			
Application					
Special feature		gold-plated contacts			
Media		ultra-pure water; water; water-based media; glycol solutions; oils; Coolants			
Note on media		water-based media: for media with >10 % additives, the repeatability is the only available value			
		low-viscosity oils with viscosity: 7...40 mm²/s (40 °C)			
		high-viscosity oils with viscosity: 30...68 mm²/s (40 °C)			
Medium temperature	[°C]	-20...100			
Min. burst pressure		150 bar		15 MPa	
Pressure rating		100 bar		10 MPa	
Vacuum resistance	[mbar]	-1000			
Electrical data					
Operating voltage	[V]	18...32 DC; (to SELV/PELV)			
Current consumption	[mA]	< 75			
Protection class		III			
Reverse polarity protection		yes			
Power-on delay time	[s]	5			
Measuring principle		ultrasonic			

SU2030

Ultrasonic flow meter

SUR21XFBFRKG/US

Inputs		
Inputs		counter reset
Outputs		
Total number of outputs		2
Output signal		switching signal; pulse signal; analog signal; IO-Link; frequency signal; diagnostic signal; totalizer switching signal
Electrical design		PNP/NPN
Output function		normally open / closed; (configurable)
Max. voltage drop switching output DC	[V]	2
Permanent current rating of switching output DC	[mA]	100
Switching frequency DC	[Hz]	0...10000
Analog current output	[mA]	4...20
Max. load	[Ω]	500
Pulse output		flow rate meter
Short-circuit protection		yes
Type of short-circuit protection		yes (non-latching)
Overload protection		yes

Measuring/setting range					
Measuring range		5...1000 l/min	300...60000 l/h	0.058...11.666 m/s	0.3...60 m³/h
Display range		-1200...1200 l/min	-72000...72000 l/h	-13.999...13.999 m/s	-72...72 m³/h
Resolution		0.1 l/min	1 l/h	0.001 m/s	0.002 m³/h
Set point SP		10.5...1000 l/min	630...60000 l/h	0.122...11.666 m/s	0.63...60 m³/h
Reset point rP		5.3...994.8 l/min	318...59688 l/h	0.062...11.605 m/s	0.318...59.688 m³/h
Analog start point ASP		-1000...800 l/min	-60000...48000 l/h	-11.666...9.333 m/s	-60...48 m³/h
Analog end point AEP		-800...1000 l/min	-48000...60000 l/h	-9.333...11.666 m/s	-48...60 m³/h
Low flow cut-off LFC		5...50 l/min	300...3000 l/h	0.058...0.583 m/s	0.3...3 m³/h
Frequency end point, FEP		200.6...1000 l/min	12037...60000 l/h	2.34...11.666 m/s	12.037...60 m³/h
Frequency at the end point FRP	[Hz]	1...10000			
Volumetric flow quantity monitoring					
Pulse length	[s]	0.002...2			
Pulse value		0.1...99990000 l			
Temperature monitoring					
Measuring range	[°C]	-20...100			
Display range	[°C]	-44...124			
Resolution	[°C]	0.1			
Set point SP	[°C]	-19.6...100			
Reset point rP	[°C]	-20...99.6			
Analog start point	[°C]	-20...76			
Analog end point	[°C]	4...100			
Frequency start point, FSP	[°C]	-20...76			
Frequency end point, FEP	[°C]	4...100			

SU2030

Ultrasonic flow meter

SUR21XFBFRKG/US

Frequency at the end point FRP	[Hz]	1...10000	
Accuracy / deviations			
Flow monitoring			
Accuracy (in the measuring range)		glycol solutions (35%)	±(5,0 % MW + 0,5 % MEW)
		high-viscosity oils with viscosity 46mm2/s (40°C)	±(5,0 % MW + 0,5 % MEW)
		low-viscosity oils with viscosity 10mm2/s (40°C)	±(5,0 % MW + 0,5 % MEW)
		water	± (1,0 % MW + 0,5 %)
Repeatability		± 0,2 % MEW	
Temperature monitoring			
Accuracy	[K]	± 2,5 (Q > 5 % MEW)	
Temperature coefficient	[% of the span / 10 K]	0,2	
Reaction times			
Flow monitoring			
Response time	[s]	< 0.25; (dAP = 0, T09)	
Damping process value dAP	[s]	0...5	
Temperature monitoring			
Dynamic response T05 / T09	[s]	5,7 / 86	
Software / programming			
Diagnostic functions		direction of flow detection; signal quality	
Interfaces			
Communication interface		IO-Link	
Transmission type		COM2 (38,4 kBaud)	
IO-Link revision		1.1.3	
SDCI standard		IEC 61131-9: 2013-07	
Profiles		BLOB	Binary Large Object transfer
		Common - I&D	Identification and Diagnosis
Required master port class		A	
Process data analog		3	
Process data binary		2	
Min. process cycle time	[ms]	9.6	
IO-Link process data (cyclical)		**Function**	**bit length**
		totalizer	32
		Flow monitoring	32
		Temperature monitoring	32
		status	4
		Output 1	1
		Output 2	1
Supported DeviceIDs		**Type of operation**	**DeviceID**
		default	1762
Operating conditions			
Ambient temperature	[°C]	-20...60	

SU2030

Ultrasonic flow meter

SUR21XFBFRKG/US

Storage temperature	[°C]	-25...80	
Protection		IP 65; IP 67	
Tests / approvals			
EMC		DIN 61326-1:2021	
Shock resistance		DIN IEC 68-2-27	20 g (11ms)
Vibration resistance		DIN IEC 68-2-6	20 g (10...2000Hz)
MTTF	[years]	160	
UL approval		UL approval number	I033
Pressure equipment directive		can be used for group 2 fluids; group 1 fluids on request	
Mechanical data			
Weight	[g]	1140.3	
Housing		rectangular	
Type of mounting		inlet pipe length 5xDN; outlet pipe length 1xDN	
Dimensions	[mm]	200 x 59.6 x 90.5	
Material		housing: stainless steel (1.4404 / 316L); Display: PFA; sealing Display: FKM; connector: PBT	
Materials (wetted parts)		Pipe section: stainless steel (1.4404 / 316L); Process connection sealing: NBR fiber-reinforced Gasket	
Process connection		threaded connection G 2 external thread DN50	
Surface characteristics Ra/Rz of the wetted parts		Ra < 1.25 µm	
Displays / operating elements			
Display			Color display 1,44", 128 x 128 pixels
		Switching function	2 x LED, yellow
		diagnosis	1 x LED, three-color
Display unit		l/min; l/h; m³/h; m/s	
Accessories			
Items supplied		Gasket 2, Centellen	
		package insert	
Remarks			
Remarks		MW = Measured value	
		MEW = Final value of the measuring range	
		pulse and totalizer signal are only available for one of the two outputs	
		the accuracy indications are adhered to over the entire application area	
Pack quantity		1 pcs.	

Electrical connection

Connector: 1 x M12; coding: A; Contacts: 4, gold-plated

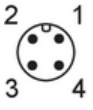

SU2030

Ultrasonic flow meter

SUR21XFBFRKG/US

Connection

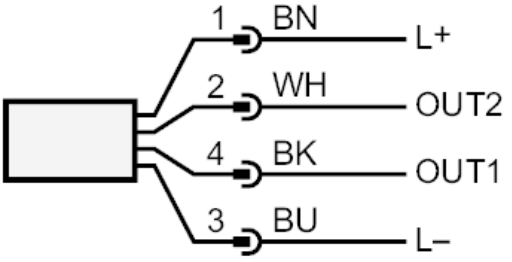

OUT1/IO-Link:	Switching output Volumetric flow quantity monitoring Switching output Temperature monitoring Pulse output quantity meter Frequency output Volumetric flow quantity monitoring Frequency output Temperature monitoring signal output Preset counter
OUT2/InD:	Switching output Volumetric flow quantity monitoring Switching output Temperature monitoring Pulse output quantity meter analog output flow analog output temperature signal output Preset counter Input counter reset
Colors to DIN EN 60947-5-2	
Core colors	BK= black BN= brown BU= blue WH= white

Diagrams and graphs

Note on pressure loss

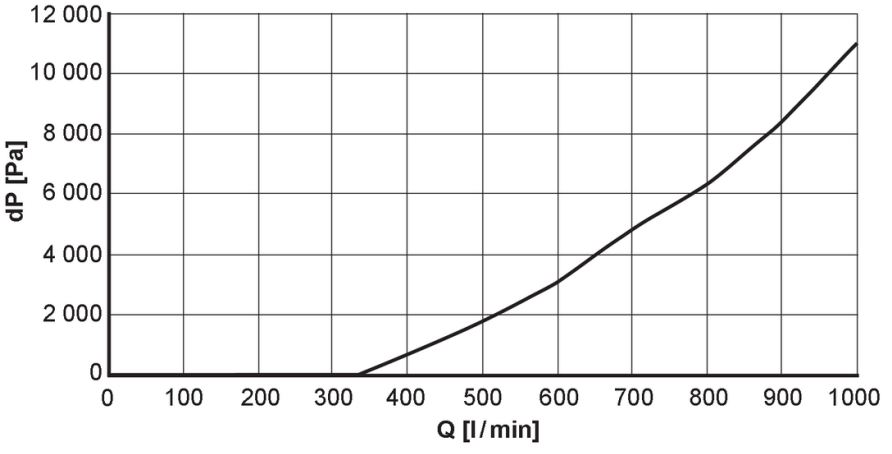

SU2030

Ultrasonic flow meter

SUR21XFBFRKG/US

derating ambient temperature

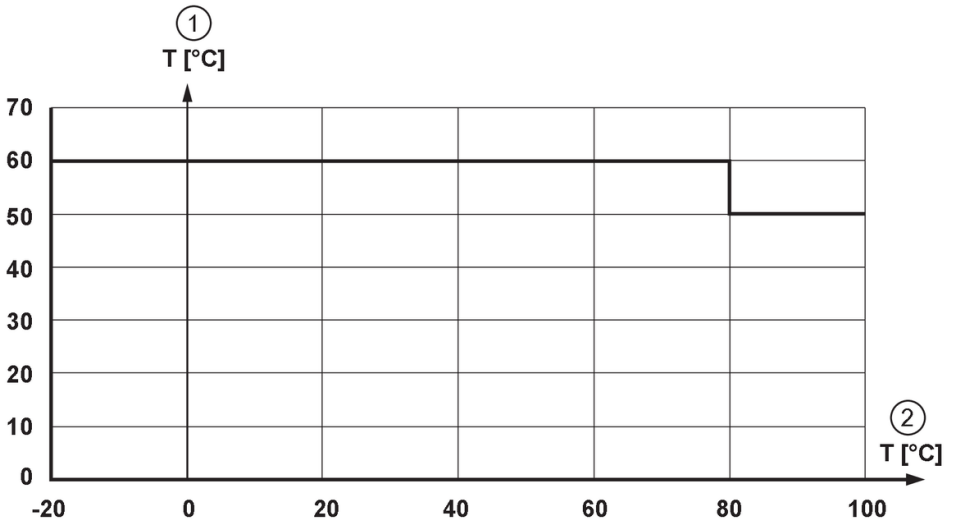

1 Ambient temperature

2 Medium temperature