SMF350

Magnetic-inductive flow meter

SMG40KGFFRKG/UST

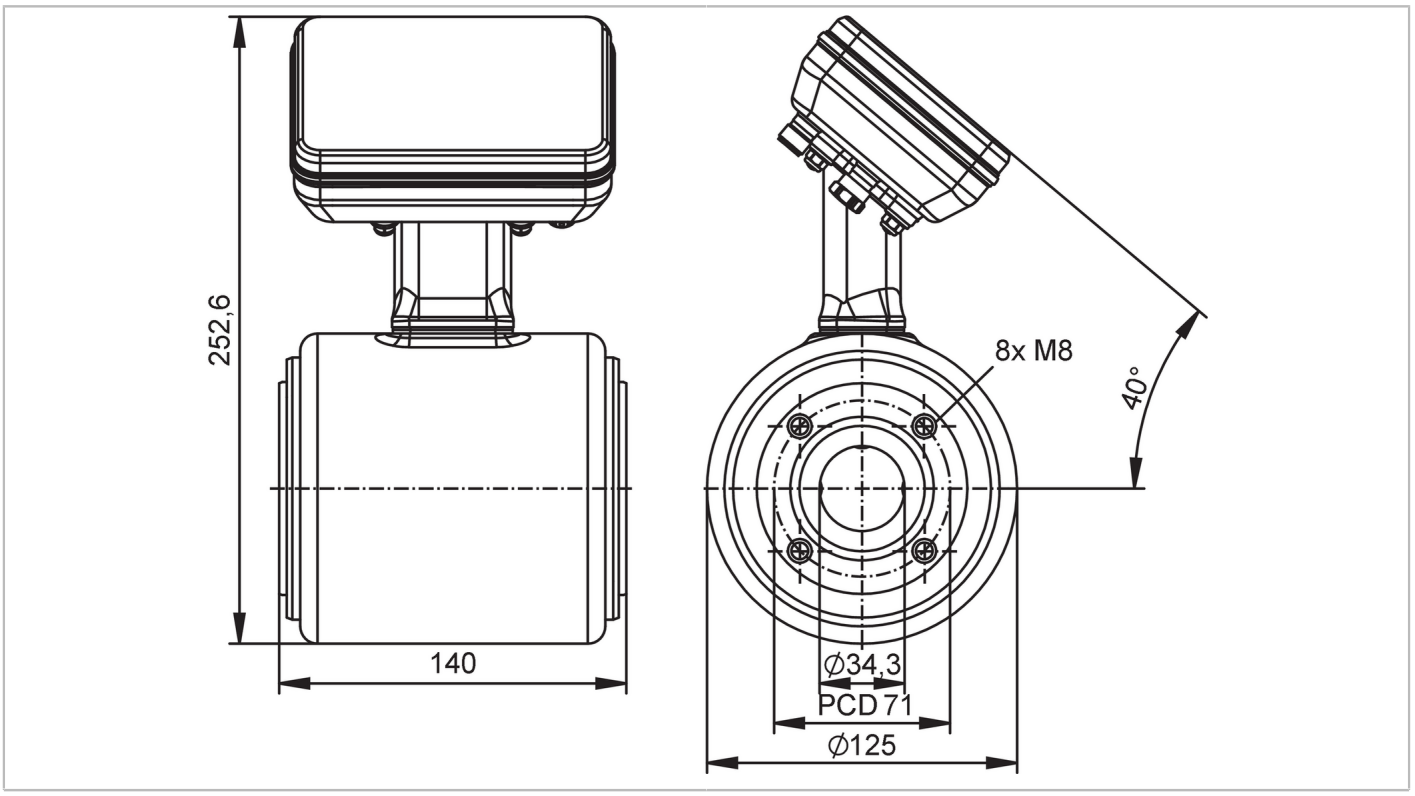

EC 1935/2004 FCM Hygienic Cleanable IO-Link

Product characteristics					
Measuring range		5...750 l/min	0.3...45 m³/h	1.32...198.15 gpm	0.23...32.8 ft/s
Nominal diameter		DN40 (1 1/2“)			
Process connection		ifm-specific device flange			
Application					
Special feature		gold-plated contacts			
Application		food and beverage industry			
Media		Conductive liquids; water; water-based media			
Note on media		food products such as beer, milk, fruit juices, soft drinks, ketchup, yogurt, yogurt toppings, ice cream			
		conductivity: ≥ 5 µS/cm			
Medium temperature	[°C]	-20...150			
Min. burst pressure		60 bar	870 psi	6 MPa	
Pressure rating		40 bar	580.1 psi	4 MPa	
MAWP (for applications according to CRN)	[MPa]	4			
Electrical data					
Operating voltage	[V]	18...32 DC			
Current consumption	[mA]	250; (24V)			
Protection class		III			
Reverse polarity protection		yes			
Power-on delay time	[s]	< 5			
Measuring principle		magnetic-inductive			

SMF350

Magnetic-inductive flow meter

SMG40KGFFRKG/UST

Inputs / outputs				
Total number of inputs and outputs		2		
Inputs				
Inputs		OUT2	external totalizer reset	
Outputs				
Total number of outputs		2		
Output signal		OUT1	pulse signal; totalizer switching signal; diagnostic signal; IO-Link	
		OUT2	analog signal; pulse signal; totalizer switching signal; diagnostic signal	
Electrical design		PNP/NPN		
Pulse output		flow rate meter		
Short-circuit protection		yes		
Type of short-circuit protection		yes (non-latching)		
Overload protection		yes		
Analog				
Number of analog outputs		1		
Analog current output	[mA]	4...20; (skalierbar)		
Max. load	[Ω]	500		
Resolution of analog output		0.38 µA		
Digital				
Number of digital outputs		2		
Max. voltage drop switching output DC	[V]	2		
Permanent current rating of switching output DC	[mA]	100		
Switching frequency DC	[Hz]	0...10000		
Measuring/setting range				
Measuring range		5...750 l/min	0.3...45 m³/h	1.32...198.15 gpm	0.23...32.8 ft/s
Note on factory setting		0...11,0 m³/h		
Analog start point ASP		-750...600 l/min	-45...36 m³/h	-198.15...158.52 gpm	-32.8...26.24 ft/s
Analog end point AEP		-600...750 l/min	-36...45 m³/h	-158.52...198.15 gpm	-26.24...32.8 ft/s
Low flow cut-off LFC		0...600 l/min	0...36 m³/h	0...158.52 gpm	0...26.24 ft/s
Pulse length	[s]	0.00005...2		
Pulse value		0.002...99999000 l		
Temperature monitoring				
Measuring range		-20...150 °C	-4...302 °F	
Analog start point		-20...116 °C	-4...240.8 °F	
Analog end point		14...150 °C	57.2...302 °F	
Conductivity monitoring				
Measuring range	[µS/cm]	100...100000		
Analog start point	[µS/cm]	0...80000		
Analog end point	[µS/cm]	20000...100000		

SMF350

Magnetic-inductive flow meter

SMG40KGFFRKG/UST

Accuracy / deviations			
Volumetric flow monitoring			
Accuracy (under reference conditions)		with optional factory calibration (availability is being planned)	± (0,2 % MW + 2 mm/s)
		standard	± (0,5 % MW + 1,5 mm/s)
Repeatability		0,1% MW	
Temperature monitoring			
Accuracy	[K]	± 1 (v > 0,5 m/s)	
Repeatability	[K]	± 0,5 (v > 0,5 m/s)	
Conductivity monitoring			
Accuracy (in the measuring range)		in the range of 100...20000 µS/cm	±10% MW
		in the range of 20000...100000 µS/cm	±20% MW
Repeatability		± 5% MW	
Reaction times			
Volumetric flow monitoring			
Response time	[s]	< 0.3	
Damping process value dAP	[s]	0...5	
Temperature monitoring			
Response time	[s]	< 3; (v > 0,5 m/s)	
Conductivity monitoring			
Response time	[s]	< 2	
Software / programming			
Diagnostic functions		direction of flow detection; liquid detection	
Interfaces			
Communication interface		IO-Link	
Transmission type		COM3 (230,4 kBaud)	
IO-Link revision		1.1.3	
SDCI standard		IEC 61131-9	
Profiles		Smart Sensor - SSP 4.3.4	Measuring and Switching Sensor, floating point, 4 channel
		BLOB	Binary Large Object transfer
		Common - I&D	Identification and Diagnosis
		Extension	Sensor Control Wide
		Extension	Quantity detection, switches when value exceeds the setpoint
		Function	Locator
		Function	ProductURI
SIO mode		yes	
Required master port class		A	
Process data analog		6	
Process data binary		8	
Min. process cycle time	[ms]	1.9	

SMF350

Magnetic-inductive flow meter

SMG40KGFFRKG/UST

IO-Link process data (cyclical)	**Function**	**bit length**
	totalizer	32
	flow	32
	temperature	32
	conductivity	32
	status	4
	binary switching information	8
IO-Link functions (acyclical)	direction of flow detection; totalizer; memory; operating hours counter; internal temperature; simulation function	
Supported DeviceIDs	**Type of operation**	**DeviceID**
	default	1791
Operating conditions		
Ambient temperature	-20...65 °C	-4...149 °F
Storage temperature	-20...80 °C	-4...176 °F
Protection	IP 67; IP 69; (to DIN EN 60529)	
Tests / approvals		
EMC	DIN 61326-1	
CPA approval	model number	SMF
	accuracy class	0,5
Shock resistance	DIN IEC 68-2-27	20 g (18ms)
Vibration resistance	DIN IEC 68-2-6	5 g (10...2000Hz)
MTTF [years]	82	
UL approval	UL approval number	I032
Pressure equipment directive	sound engineering practice; can be used for group 2 fluids; group 1 fluids on request	
Mechanical data		
Weight [g]	5300	
Housing	tubular	
Inlet pipe length	5 x DN	
Outlet pipe length	2 x DN	
Dimensions [mm]	Ø 125 / L = 140	
Material	housing: stainless steel (1.4404 / 316L); flange: stainless steel (1.4301 / 304); electronics fixture: stainless steel (1.4301 / 304); electronics: stainless steel (1.4404 / 316L); LED ring: PP	
Materials (wetted parts)	Pipe section: PFA; electrodes: stainless steel (1.4435 / 316L)	
Nominal diameter	DN40 (1 1/2“)	
Process connection	ifm-specific device flange	
Surface characteristics Ra/Rz of the wetted parts	Ra < 0.4 µm	
Displays / operating elements		
Display	operating status	LED ring, three-color
Factory setting	m³/h; °C; µS/cm	

SMF350

Magnetic-inductive flow meter

SMG40KGFFRKG/UST

Remarks

Remarks	MW = Measured value
	MEW = Final value of the measuring range
	pulse and totalizer signal are only available for one of the two outputs
	reference conditions (1/2): water (free of gas bubbles), 15...35 °C, process connection: DIN32676 series A, pipe standard suitable for process connection
	reference conditions (2/2): inlet pipe length 10xDN, outlet pipe length 5xDN, device settling time: 30 minutes, device orientation: horizontal, display orientation: up
	accuracy specifications according to factory certificate on delivery
Pack quantity	1 pcs.

Electrical connection

Connector: 1 x M12; coding: A; Contacts: 4, gold-plated

Connection

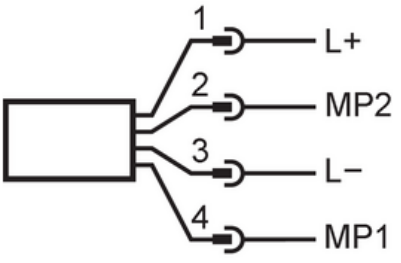

Electrical connection - plug

1	L+	
2	MP2	DO2, AO, Reset
3	L-	
4	MP1	DO1, IO-Link

AO: analog output; DO: digital output; MP: multi-function connection