SA5014

Flow sensor

SAD10XDB50KG/US-100

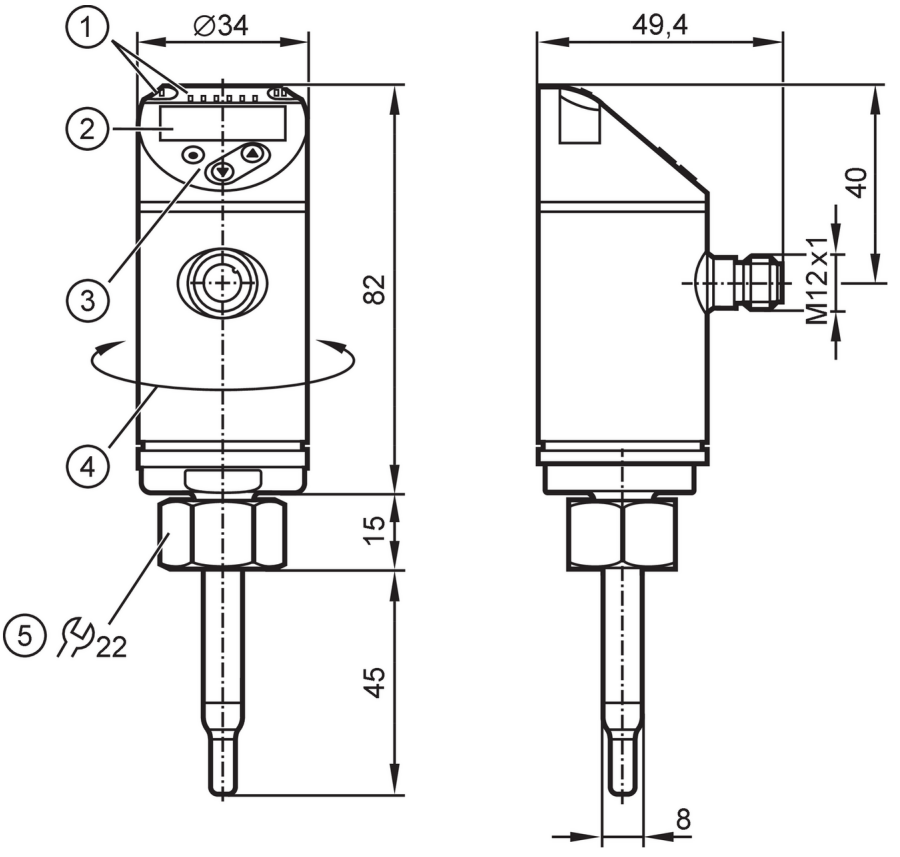

1 LEDs Display unit
I, II not used
2 alphanumeric display 4-digit red/green
3 Programming buttons
4 upper part of the housing can be rotated 345°

Product characteristics			
Number of inputs and outputs		Number of analog outputs: 2	
Process connection		threaded connection M18 x 1,5 Internal thread	
Application			
Special feature		gold-plated contacts	
Media		water; glycol solutions; air; oils	
Note on media		low-viscosity oils with viscosity: ≤ 40 mm²/s (104 °F)	
		high-viscosity oils with viscosity: > 40 mm²/s (104 °F)	
Medium temperature	[°F]	-4...194	
Pressure rating		100 bar	10 MPa
MAWP (for applications according to CRN)		100 bar	10 MPa
Electrical data			
Operating voltage	[V]	18...30 DC	
Current consumption	[mA]	< 100	
Protection class		III	
Reverse polarity protection		yes	
Power-on delay time	[s]	10	

SA5014

Flow sensor

SAD10XDB50KG/US-100

Measuring principle		calorimetric
Inputs / outputs		
Number of inputs and outputs		Number of analog outputs: 2
Outputs		
Total number of outputs		2
Output signal		analog signal
Number of analog outputs		2
Analog current output	[mA]	4...20; (scalable)
Max. load	[Ω]	350
Short-circuit protection		yes
Type of short-circuit protection		yes (non-latching)
Overload protection		yes
Measuring/setting range		
Probe length L	[mm]	45
Operating mode		relative; absolutely liquid; absolutely gaseous; (absolute: reference measurement recommended; Factory setting: relative)
Liquids		
Resolution	[ft/s]	0.05
Analog start point ASP	[ft/s]	0...7.95
Analog end point AEP	[ft/s]	1.9...9.85
Gases		
Resolution	[ft/s]	2
Analog start point ASP	[ft/s]	0...264
Analog end point AEP	[ft/s]	64...328
Temperature monitoring		
Measuring range	[°F]	-4...194
Resolution	[°F]	0.5
Analog start point	[°F]	-4...169
Analog end point	[°F]	39...212
In steps of	[°F]	0.5
Liquid media - absolute operating mode		
Setting range	[ft/s]	0.15...9.85
Greatest sensitivity	[ft/s]	0.15...9.85
Liquid media - relative operating mode		
Setting range	[ft/s]	0.15...19.5
Greatest sensitivity	[ft/s]	0.15...9.85
Gases - operating mode "absolute"		
Setting range	[ft/s]	6...328
Greatest sensitivity	[ft/s]	6...328
Gases - operating mode "relative"		
Setting range	[ft/s]	6...656
Greatest sensitivity	[ft/s]	6...328

SA5014

Flow sensor

SAD10XDB50KG/US-100

Accuracy / deviations			
Temperature drift	[cm/s x 1/K]	0,01 fps x 1/K (< 68 °F; > 158 °F)	
Max. temperature gradient of medium	[K/min]	100	
Absolute operating mode			
Repeatability		0,05 m/s; (water; Flow velocity: 0,05...3 m/s)	
Relative operating mode			
Accuracy		± (7 % MW + 2 % MEW); (for relative mode in the range of maximum sensitivity under the following conditions:; water: 68...158 °F; inlet length: 5 ft; DN25 (DIN 2448); mounting position according to instructions; Accuracy can differ for other media and mounting positions.)	
Repeatability		0,05 m/s; (water; Flow velocity: 0,05...3 m/s)	
Temperature monitoring			
Temperature drift		± 0,003 K/°F	
Accuracy	[K]	± 0,3 / ± 1; (water; Flow velocity: 1...9,85 fps / air; Flow velocity: > 32,8 fps)	
Reaction times			
Response time	[s]	0.5; (T09; water; glycol: 0,8 s; air: 7 s; oil: 1,8 s; each T09)	
Temperature monitoring			
Dynamic response T05 / T09	[s]	1,5 (T09); (water; Flow velocity: 0,3...3 m/s)	
Software / programming			
Parameter setting options		medium selection; Damping; Teach function; display can be rotated and switched off; standard unit of measurement; process value color	
Operating conditions			
Ambient temperature	[°F]	-40...176	
Storage temperature	[°F]	-40...212	
Protection		IP 65; IP 67	
Tests / approvals			
EMC		DIN EN 60947-5-9	
Shock resistance		DIN EN 60068-2-27	50 g (11 ms)
Vibration resistance		DIN EN 60068-2-6	20 g (10...2000 Hz)
MTTF	[years]	179	
UL approval		UL approval number	I004
		File number UL	E174189
Mechanical data			
Weight	[g]	278	
Housing		tubular	
Dimensions	[mm]	Ø 34 / L = 142	
Material		stainless steel (1.4404 / 316L); stainless steel (1.4310 / 301); PBT-GF20; PBT-GF30	
Materials (wetted parts)		stainless steel (1.4404 / 316L); Gasket: FKM	
Process connection		threaded connection M18 x 1,5 Internal thread	
Probe diameter	[mm]	8	
Installation length EL	[mm]	45	
Displays / operating elements			
Display		Display unit	6 x LED, green (%, m/s, l/min, m³/h, °C, 10³)
		Measured values	alphanumeric display, red/green 4-digit

SA5014

Flow sensor

SAD10XDB50KG/US-100

Remarks

Remarks	MW = Measured value
	MEW = Final value of the measuring range
Pack quantity	1 pcs.

Electrical connection

Connector: 1 x M12; coding: A; Contacts: 4, gold-plated

Connection

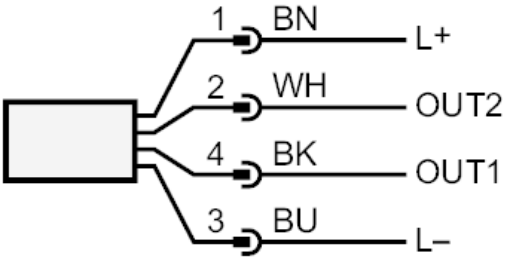

OUT1:	analog output Temperature monitoring
OUT2:	analog output Volumetric flow quantity monitoring
Colors to DIN EN 60947-5-2	:
Core colors	:
BK =	black
BN =	brown
BU =	blue
WH =	white