PN7697

Pressure sensor with display

PN-001BREN14-QFRKG/US/ /V

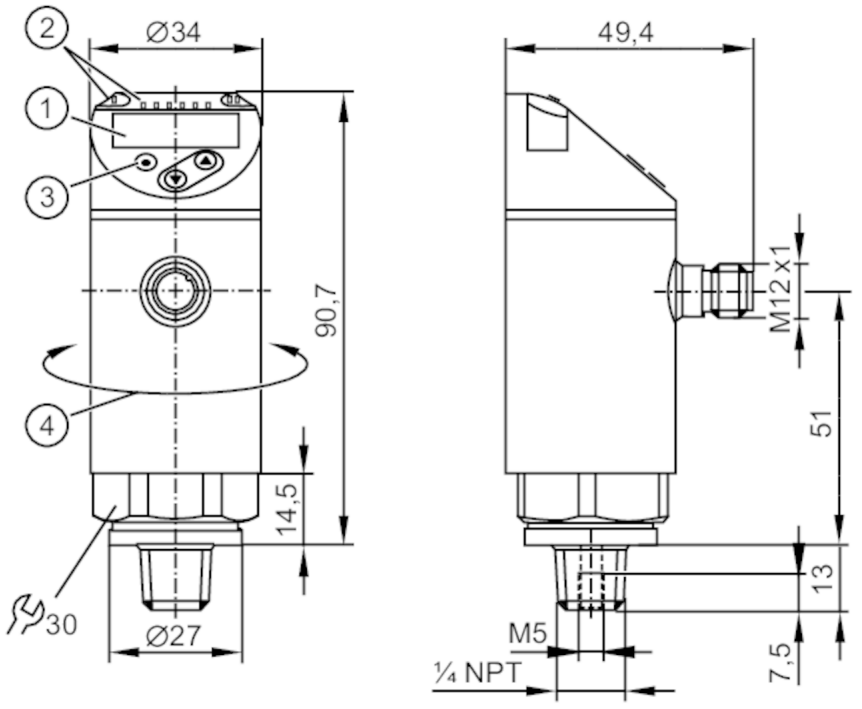

1 alphanumeric display 4-digit red/green
2 LEDs Display unit / Switching status
3 Programming button
4 upper part of the housing can be rotated 345°

Product characteristics					
Number of inputs and outputs	Number of digital outputs: 2				
Measuring range	0...1 bar	0...1000 mbar	0...14.5 psi	0...29.5 inHg	0...100 kPa
Process connection	threaded connection 1/4" NPT external thread				
Application					
Special feature	gold-plated contacts				
Measuring element	ceramic-capacitive pressure measuring cell				
Application	for industrial applications				
Media	liquids and gases				
Medium temperature [°C]	-25...80				
Min. burst pressure	30000 mbar	450 psi	880 inHg	3000 kPa	
Pressure rating	10000 mbar	145 psi	290 inHg	1000 kPa	
Type of pressure	relative pressure				
MAWP (for applications according to CRN)	10 bar	10000 mbar	145 psi	290 inHg	1000 kPa
Electrical data					
Operating voltage [V]	18...30 DC; (to SELV/PELV)				
Current consumption [mA]	< 35				
Min. insulation resistance [MΩ]	100; (500 V DC)				
Protection class	III				
Reverse polarity protection	yes				

PN7697

Pressure sensor with display

PN-001BREN14-QFRKG/US/ /V

Power-on delay time [s]	< 0.3
Integrated watchdog	yes
Inputs / outputs	
Number of inputs and outputs	Number of digital outputs: 2
Outputs	
Total number of outputs	2
Output signal	switching signal; IO-Link; (configurable)
Electrical design	PNP/NPN
Number of digital outputs	2
Output function	normally open / closed; (configurable)
Max. voltage drop switching output DC [V]	2.5
Permanent current rating of switching output DC [mA]	150; (200 (...60 °C) 250 (...40 °C))
Switching frequency DC [Hz]	< 170
Short-circuit protection	yes
Type of short-circuit protection	yes (non-latching)
Overload protection	yes

Measuring/setting range					
Measuring range	0...1 bar	0...1000 mbar	0...14.5 psi	0...29.5 inHg	0...100 kPa
Factory setting / CMPT = 2					
Set point SP	10...1000 mbar	0.1...14.5 psi	0.2...29.5 inHg	1...100 kPa	
Reset point rP	5...995 mbar	0.05...14.45 psi	0.1...29.4 inHg	0.5...99.5 kPa	
Min. difference between SP and rP	5 mbar	0.1 psi	0.2 inHg	0.5 kPa	
In steps of	5 mbar	0.05 psi	0.1 inHg	0.5 kPa	
Status_B High Resolution / CMPT = 3					
Set point SP	8...1000 mbar	0.12...14.5 psi	0.2...29.5 inHg	0.8...100 kPa	
Reset point rP	3...995 mbar	0.05...14.43 psi	0.1...29.4 inHg	0.3...99.5 kPa	
Min. difference between SP and rP	5 mbar	0.08 psi	0.2 inHg	0.5 kPa	
In steps of	1 mbar	0.01 psi	0.1 inHg	0.1 kPa	

Accuracy / deviations	
Switch point accuracy [% of the span]	< ± 0,5
Repeatability [% of the span]	< ± 0,1; (with temperature fluctuations < 10 K)
Characteristics deviation [% of the span]	< ± 0,25 (BFSL) / < ± 0,5 (LS); (BFSL = Best Fit Straight Line; LS = limit value setting)
Hysteresis deviation [% of the span]	< ± 0,25
Long-term stability [% of the span]	< ± 0,05; (per 6 months)
Temperature coefficient zero point [% of the span / 10 K]	< ± 0,2; (-0...80 °C)
Temperature coefficient span	< ± 0,2; (-0...80 °C)

PN7697

Pressure sensor with display

PN-001BREN14-QFRKG/US/ /V

[% of the span / 10 K]		
Reaction times		
Response time [ms]	< 3	
Delay time programmable dS, dr [s]	0...50	
Software / programming		
Parameter setting options	hysteresis / window; normally open / closed; switching logic; switch-on/switch-off delay; Damping; Display unit	
Interfaces		
Communication interface	IO-Link	
Transmission type	COM2 (38,4 kBaud)	
IO-Link revision	1.1	
SDCI standard	IEC 61131-9	
SIO mode	yes	
Required master port class	A; (when pin 2 not connected: B)	
Supported DeviceIDs	**Type of operation**	**DeviceID**
	Factory setting / CMPT = 2	456
	Status_B High Resolution / CMPT = 3	635
Note	For further information please see the IODD PDF file at "Downloads"	
Factory setting / CMPT = 2		
Profiles	Smart Sensor - SSP 0	Generic Profiled Sensor
	Function	Device identification
	Function	Process data variable
	Function	Device diagnosis
Min. process cycle time [ms]	2.3	
IO-Link resolution pressure	1 mbar	0.001 MPa
IO-Link process data (cyclical)	**Function**	**bit length**
	pressure	14
	binary switching information	2
IO-Link functions (acyclical)	application specific tag	
Status_B High Resolution / CMPT = 3		
Profiles	Smart Sensor - SSP 3.1	Measuring Sensor
	Common - I&D	Identification and Diagnosis
Min. process cycle time [ms]	3	
IO-Link resolution pressure	0.5 mbar	0.0005 MPa
IO-Link process data (cyclical)	**Function**	**bit length**
	pressure	16
	device status	4
	binary switching information	2
IO-Link functions (acyclical)	application specific tag	
Operating conditions		
Ambient temperature [°C]	-25...80	
Storage temperature [°C]	-40...100	
Protection	IP 65; IP 67	

PN7697

Pressure sensor with display

PN-001BREN14-QFRKG/US/ /V

Tests / approvals			
EMC		DIN EN 61000-6-2	
		DIN EN 61000-6-3	
Shock resistance		DIN EN 60068-2-27	50 g (11 ms)
Vibration resistance		DIN EN 60068-2-6	20 g (10...2000 Hz)
MTTF	[years]	260	
UL approval		UL approval number	J001
Pressure equipment directive		sound engineering practice; can be used for group 2 fluids; group 1 fluids on request	

Mechanical data		
Weight	[g]	243.5
Housing		tubular
Dimensions	[mm]	Ø 34 / L = 90.7
Material		stainless steel (1.4404 / 316L); PBT+PC-GF30; PBT-GF20; PC
Materials (wetted parts)		stainless steel (1.4404 / 316L); ceramics; FKM
Min. pressure cycles		100 million
Tightening torque	[Nm]	2...3 turns after hand-fastening; recommended tightening torque; Depends on lubrication, seal and pressure rating
Process connection		threaded connection 1/4" NPT external thread
Restrictor element integrated		no (can be retrofitted)

Displays / operating elements		
Display	Display unit	4 x LED, green (mbar, psi, kPa, inHg)
	Switching status	2 x LED, yellow
	Measured values	alphanumeric display, red/green 4-digit

Remarks	
Pack quantity	1 pcs.

Electrical connection

Connector: 1 x M12; coding: A; Contacts: 4, gold-plated

PN7697

Pressure sensor with display

PN-001BREN14-QFRKG/US/ /V

Connection

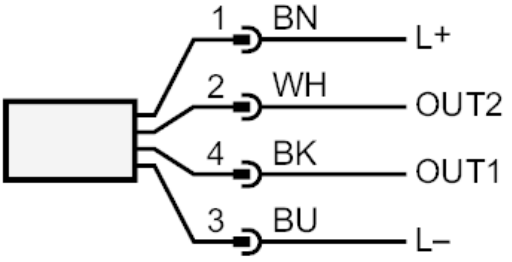

OUT1	Switching output IO-Link
OUT2	Switching output
	Colors to DIN EN 60947-5-2
	Core colors :
BK =	black
BN =	brown
BU =	blue
WH =	white