OT5048

Retro-reflective sensor

OTP-FPKG/US-100-IPF

Article no longer available - archive entry

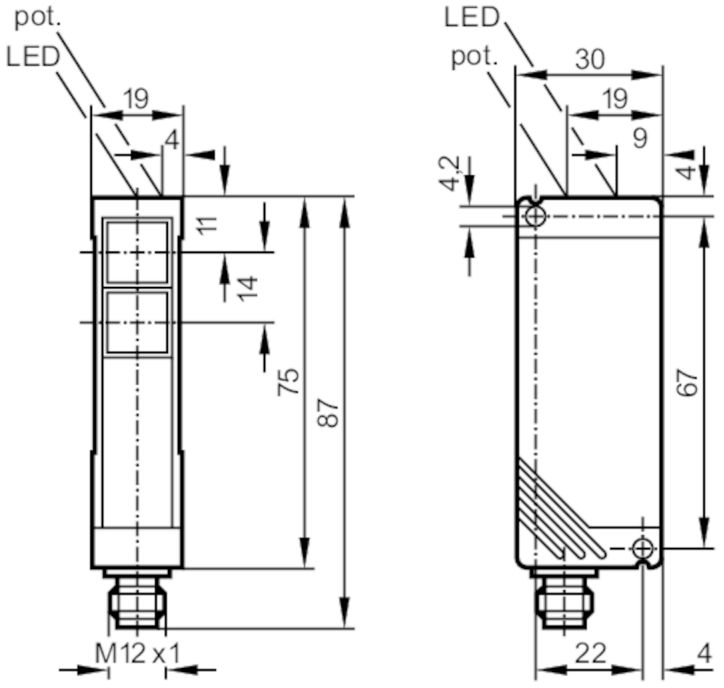

Receiver in lower lens
Transmitter in upper lens

Product characteristics		
Type of light		red light
Housing		rectangular
Application		
System		polarization filter
Function principle		Retro-reflective sensor
Electrical data		
Operating voltage	[V]	10...55 DC
Current consumption	[mA]	35; ((24 V))
Protection class		II
Reverse polarity protection		yes
Type of light		red light
Wave length	[nm]	660
Outputs		
Electrical design		PNP
Output function		light-on/dark-on mode; (configurable)
Max. voltage drop switching output DC	[V]	2.5
Permanent current rating of switching output DC	[mA]	250
Switching frequency DC	[Hz]	150
Short-circuit protection		yes

OT5048

Retro-reflective sensor

OTP-FPKG/US-100-IPF

Type of short-circuit protection		yes (non-latching)	
Overload protection		yes	
Monitoring range			
Range	[m]	0.2...2; (Prismatic reflector Ø 80 E20005)	
Range adjustable		yes	
Polarization filter available		yes	
Operating conditions			
Ambient temperature	[°C]	-25...60	
Protection		IP 65	
Tests / approvals			
EMC		EN 60947-5-2	
		EN 55011	class B
Mechanical data			
Housing		rectangular	
Dimensions	[mm]	75 x 19 x 30	
Material		PBT	
Lens material		PMMA	
Displays / operating elements			
Display		Switching status	1 x LED, yellow
		Power	1 x LED, green
Accessories			
Items supplied		Angle bracket: 1, E20461	
		screwdrivers	
Remarks			
Pack quantity		1 pcs.	

Electrical connection

Connector: 1 x M12; coding: A

OT5048

Retro-reflective sensor

OTP-FPKG/US-100-IPF

Connection