O6T200

Diffuse reflection sensor

O6T-FPKG

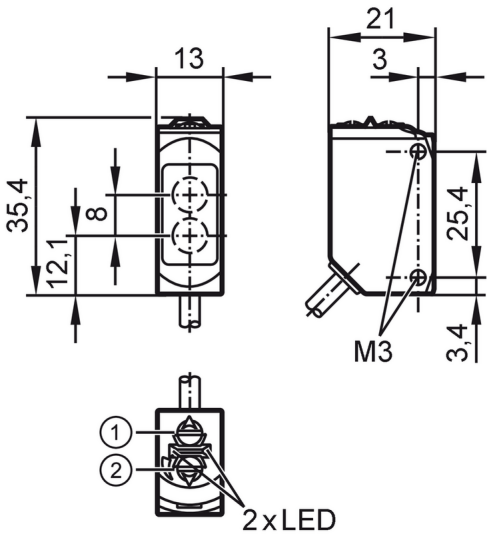

1: output function switch
2: potentiometer sensitivity
Receiver in upper lens
transmitter in lower lens

Product characteristics		
Type of light		red light
Housing		rectangular
Application		
Function principle		Diffuse reflection sensor
Application		Industrial applications
Electrical data		
Operating voltage	[V]	10...30 DC
Current consumption	[mA]	16; ((24 V))
Protection class		III
Reverse polarity protection		yes
Type of light		red light
Wave length	[nm]	633
Outputs		
Electrical design		PNP
Output function		light-on/dark-on mode; (selectable)
Max. voltage drop switching output DC	[V]	2.5
Permanent current rating of switching output DC	[mA]	100
Switching frequency DC	[Hz]	1000
Short-circuit protection		yes
Type of short-circuit protection		yes (non-latching)
Monitoring range		
Range	[mm]	5...500; (white paper 200 x 200 mm 90 % remission)

O6T200

Diffuse reflection sensor

O6T-FPKG

Setting range	[mm]	100...500	
Range adjustable		yes	
Max. light spot diameter	[mm]	15	
Light spot dimensions refer to		at maximum range	
Operating conditions			
Ambient temperature	[°C]	-25...60	
Protection		IP 65; IP 67	
Tests / approvals			
EMC		EN 60947-5-2	
MTTF	[years]	897	
UL approval		Ta	-25...60 °C
		Enclosure type	Type 1
		voltage supply	Class 2
		UL approval number	E008
Mechanical data			
Weight	[g]	59.5	
Housing		rectangular	
Dimensions	[mm]	35.4 x 13 x 21	
Material		housing: ABS orange; upper part of the housing: PPSU black; sealing: EPDM	
Lens material		front lens:PMMA	
Lens alignment		Side sensing	
Tightening torque	[Nm]	0.5	
Displays / operating elements			
Display		Switching status	1 x LED, yellow
		Power	1 x LED, green
Remarks			
Remarks		cULus - Class 2 source required	
Pack quantity		1 pcs.	

O6T200

Diffuse reflection sensor

O6T-FPKG

Electrical connection

Cable: 2 m, PUR; 3 x 0.25 mm²

Connection

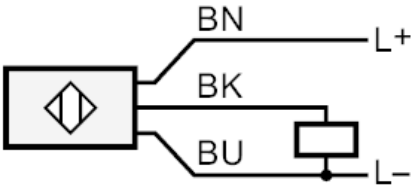

	Core colors :
BN =	brown
BK =	black
BU =	blue

Diagrams and graphs

excess gain graph

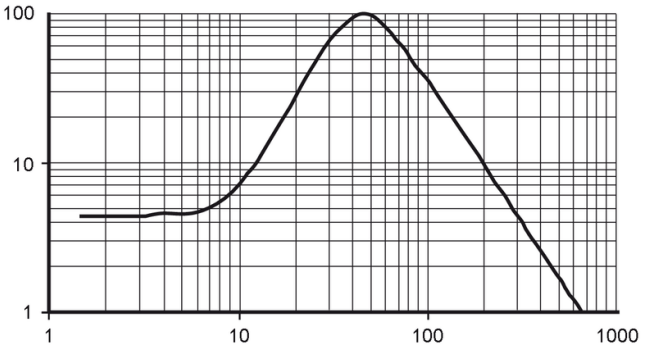

x: distance [mm]

y: excess gain factor