O6H214

Diffuse reflection sensors with background suppression

O6H-HNKG/AS/4P

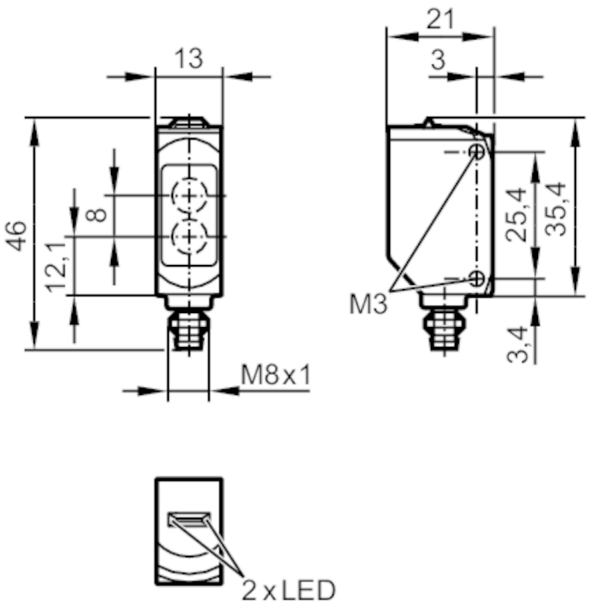

Receiver in upper lens
transmitter in lower lens

Product characteristics		
Type of light		red light
Housing		rectangular
Application		
System		Background suppression
Function principle		Diffuse reflection sensor
Electrical data		
Operating voltage	[V]	10...30 DC
Current consumption	[mA]	22; ((24 V))
Protection class		III
Reverse polarity protection		yes
Type of light		red light
Wave length	[nm]	633
Outputs		
Electrical design		NPN
Output function		light-on mode
Max. voltage drop switching output DC	[V]	2.5
Permanent current rating of switching output DC	[mA]	100
Switching frequency DC	[Hz]	1000
Short-circuit protection		yes
Type of short-circuit protection		yes (non-latching)

O6H214

Diffuse reflection sensors with background suppression

O6H-HNKG/AS/4P

Monitoring range		
Range	[mm]	< 200; (white paper 200 x 200 mm)
Range on white object (90 % remission)	[mm]	< 200
Range on grey object (18 % remission)	[mm]	4...200
Range on black object (6 % remission)	[mm]	8...200
Max. light spot diameter	[mm]	8
Light spot dimensions refer to		at maximum range
Background suppression available		yes

Operating conditions		
Ambient temperature	[°C]	-25...60
Protection		IP 65; IP 67

Tests / approvals			
EMC		EN 60947-5-2	
MTTF	[years]	1113	
UL approval		UL approval number	E001

Mechanical data		
Weight	[g]	14.4
Housing		rectangular
Dimensions	[mm]	46 x 13 x 21
Material		housing: ABS; PPSU
Lens material		PMMA
Lens alignment		Side sensing
Tightening torque	[Nm]	0.5

Displays / operating elements		
Display	Switching status	1 x LED, yellow
	Power	1 x LED, green

Remarks	
Remarks	cULus - Class 2 source required
Pack quantity	1 pcs.

Electrical connection

Connector: 1 x M8; coding: A; Locking: brass, coated

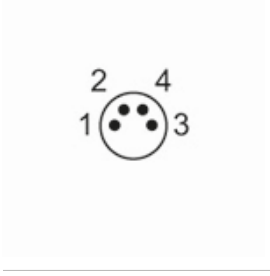

O6H214

Diffuse reflection sensors with background suppression

O6H-HNKG/AS/4P

Connection

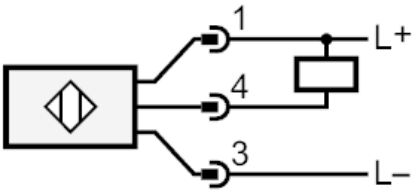

Diagrams and graphs

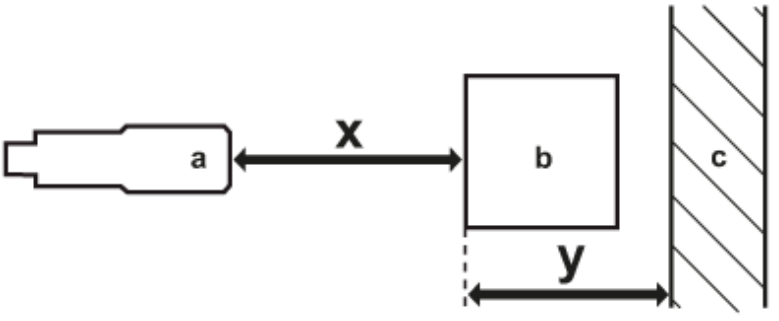

a: sensor

b: object

c: background

x: distance sensor/object [mm]

y: min. distance object/background [mm]

O6H214

Diffuse reflection sensors with background suppression

O6H-HNKG/AS/4P

Background suppression chart

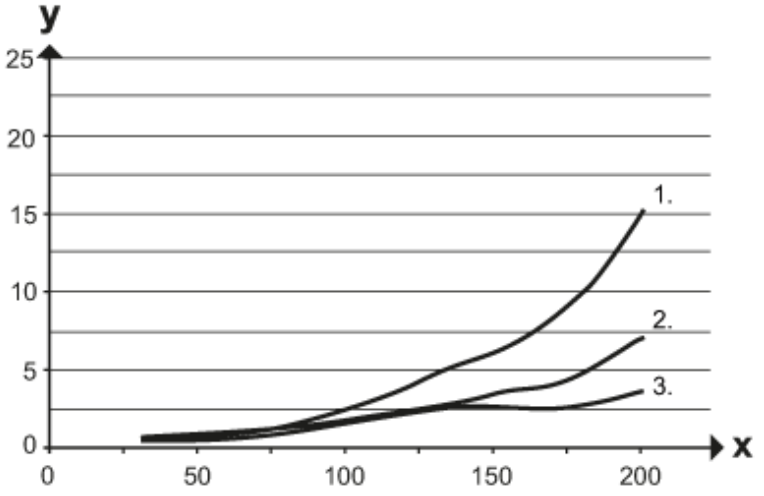

x: distance sensor/object [mm]

y: min. distance object/background [mm]

1 = object black (6 % remission) , Background white (90 % remission)

2 = object grey (18 % remission) , Background white (90 % remission)

3 = object white (90 % remission) , Background white (90 % remission)