O2D932

External illumination

Dome Light 130 WH IR/ US

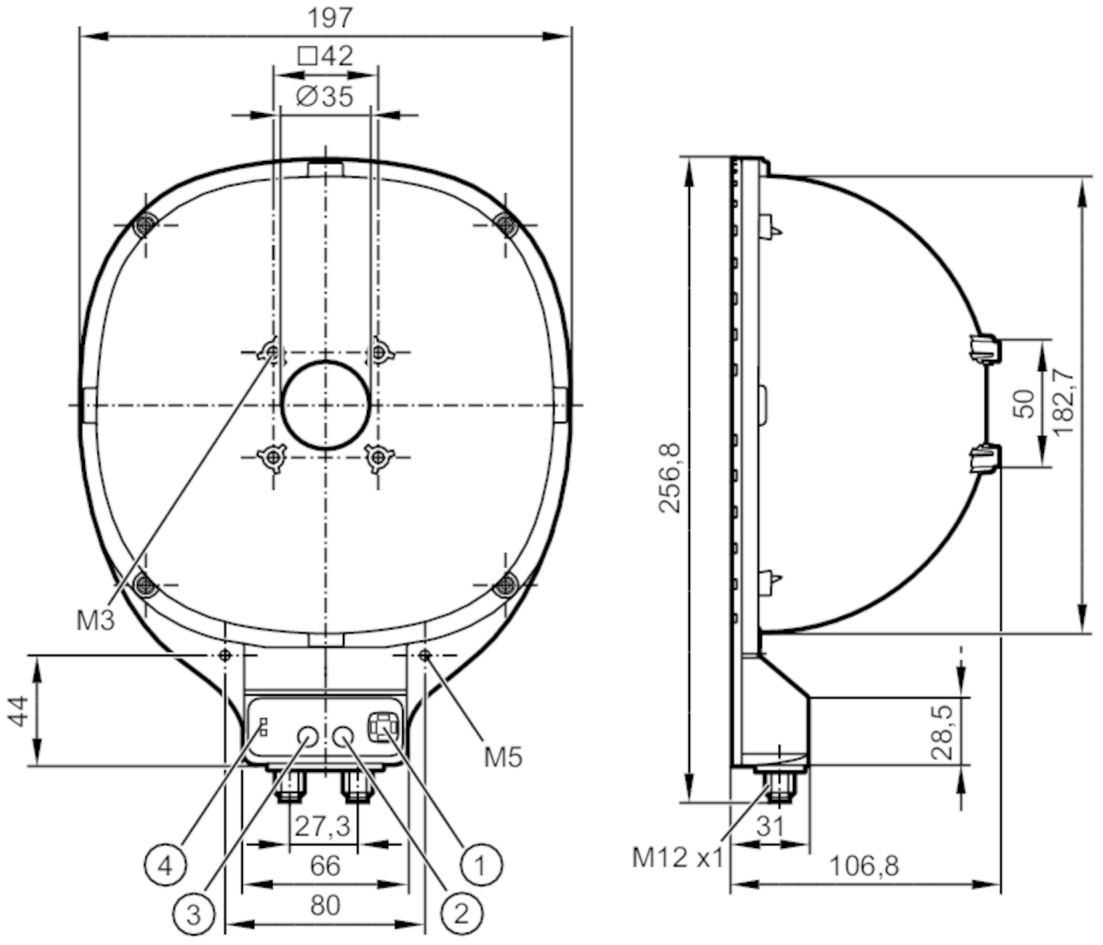

1 LED segment
2 pushbutton Segment
3 pushbutton Colour
4 LED operating status

Product characteristics		
Type of light		White light; Infrared light
Application		
Illuminated field	[mm]	130 x 130
Design		Dome
Type of operation		normal light intensity (permanent operation possible); High light intensity (pulsed)
Electrical data		
Operating voltage	[V]	24 DC
Current consumption	[mA]	Operating mode "permanent operation": 540; operating mode "high light intensity": 2580
Protection class		III; (PELV)
Type of light		White light; Infrared light
Inputs / outputs		
Number of inputs and outputs		Number of digital inputs: 1
Inputs		
Trigger		24 V PNP/NPN; external

O2D932

External illumination

Dome Light 130 WH IR/ US

Number of digital inputs		1
Operating conditions		
Ambient temperature	[°C]	-10...40
Storage temperature	[°C]	-20...60
Protection		IP 65
Tests / approvals		
Photobiological safety		risk group 1; (DIN EN 62471)
Mechanical data		
Weight	[g]	1018.15
Dimensions	[mm]	256.8 x 197 x 106.8
Material		housing: aluminum black anodized; Cover: ABS
Tightening torque	[Nm]	0.5...1.5

Displays / operating elements		
Display	Power	1 x LED, green
	operating mode "high light intensity"	1 x LED, red
	LED segment	1 x LED, white

Remarks	
Pack quantity	1 pcs.

Electrical connection - Parameter setting

Connector: M12; coding: A

1:	operating mode "high light intensity"
2:	color 2
3:	GND
4:	LED segment 1
5:	LED segment 2
6:	LED segment 3
7:	LED segment 4
8:	deactivate buttons

O2D932

External illumination

Dome Light 130 WH IR/ US

Electrical connection - voltage supply

Connector: M12; coding: A

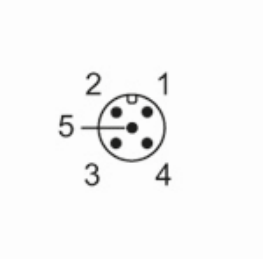

1:	U+
2:	trigger input NPN
3:	GND
4:	trigger input PNP
5:	dimmer