GG507S

Fail-safe inductive sensor

GIGA-4010-US

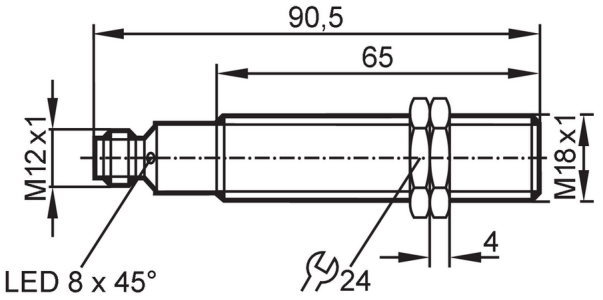

Product characteristics		
Output function		Clock signal
Enable zone	[mm]	1...4
Housing		Threaded type
Dimensions	[mm]	M18 x 1 / L = 90.5
Application		
Special feature		gold-plated contacts
Type of operation		continuous operation (maintenance-free)
Safety-related function		safe state when undamped
Application		Industrial applications
Electrical data		
Operating voltage	[V]	19.2...30 DC
Current consumption	[mA]	< 15
Protection class		III
Reverse polarity protection		yes
Max. power-on delay time	[ms]	5000
Inputs		
Max. input capacitance Ci_max	[nF]	2
Outputs		
Output function		Clock signal
Output data		Interface type B
Short-circuit protection		yes
Max. capacitive load CL_max	[nF]	20
Monitoring range		
Enable zone	[mm]	1...4
Safe switching-off distance s(ar)	[mm]	10
Reaction times		
Response time to safety request	[ms]	20
Response time when approaching the enable zone	[ms]	200; (typical 100)

GG507S

Fail-safe inductive sensor

GIGA-4010-US

Operating conditions		
Applications		Class C to EN 60654-1 weatherproof application
Ambient temperature	[°C]	-25...70
Note on ambient temperature		operational life ≤ 87600 h
Ambient temperature	[°C]	10...40
Note on ambient temperature		operational life ≤ 175200 h
Rate of temperature change	[K/min]	0.5
Max. relative air humidity	[%]	briefly: 5...95 %; permanent: 5...70 %
Air pressure	[kPa]	80...106
Ionizing radiation		not permissible
Salt spray		no
Protection		IP 68; IP 69K; (to EN 60529)

Tests / approvals		
EMC	IEC 60947-5-2	
	IEC 60947-5-3	
	EN 61000-4-2 ESD	6 kV CD / 8 kV AD
	EN 61000-4-3 HF radiated	20 V/m
	EN 61000-4-4 Burst	2 kV
	EN 61000-4-6 HF conducted	10 V
	EN 61000-4-8	30 A/m
	EN 55011	class B
Shock resistance	IEC 60947-5-2	
Vibration resistance	IEC 60947-5-2	

Safety classification		
Complies with the requirements		ISO 13849-1: 2015 Category 3, PL e
		IEC 61508 SIL 3
MIssion time TM	[h]	≤ 175200
Mission time TM (additional indication)		20 years
PFH	[1/h]	1E-08

Mechanical data		
Weight	[g]	191
Housing		Threaded type
Mounting		flush mountable
Dimensions	[mm]	M18 x 1 / L = 90.5
Thread designation		M18 x 1
Material		housing: brass special coating; sensing face: PBT

Displays / operating elements		
Display	Power	1 x LED, green
	signal	1 x LED, yellow

Accessories	
Items supplied	lock nuts: 2

Remarks	
Remarks	Unless stated otherwise, all data refer to the reference target plate to IEC 60947-5-2 over the whole temperature range.
	(FE360 = ST37K) 24x24x1 mm

GG507S

Fail-safe inductive sensor

GIGA-4010-US

Pack quantity	1 pcs.

Electrical connection - plug

Connector: 1 x M12; coding: A; Contacts: gold-plated

Connection

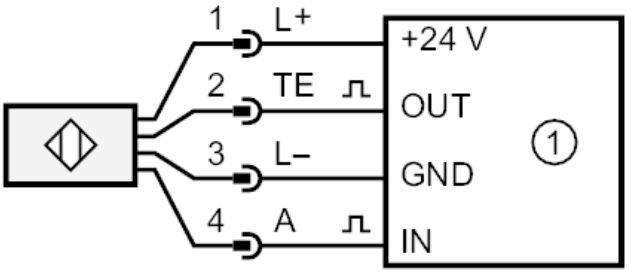

1 = Safety-related logic unit