RO6350

Incremental encoder with hollow shaft

RO-5000-I24/N1U

phase-out article

Alternative articles: ROP521 + E12402
When selecting an alternative article and accessories please note that technical data may differ!

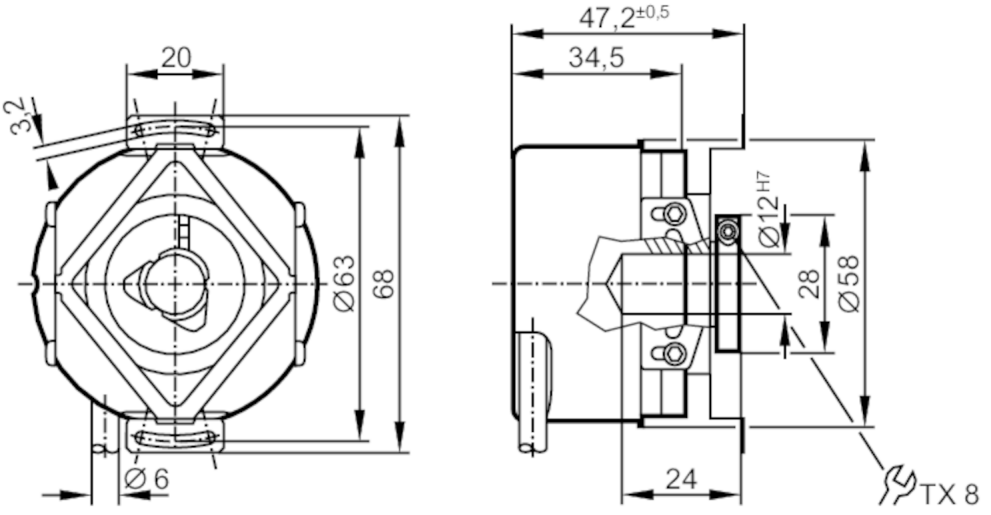

Product characteristics		
Resolution		5000 resolution
Shaft design		hollow shaft open to one side
Shaft diameter	[mm]	12
Application		
Function principle		incremental
Electrical data		
Operating voltage	[V]	10...30 DC
Current consumption	[mA]	< 150
Outputs		
Electrical design		HTL
Max. current load per output	[mA]	50
Switching frequency	[kHz]	300
Type of short-circuit protection		< 60 s
Phase difference A and B	[°]	90
Measuring/setting range		
Resolution		5000 resolution
Operating conditions		
Ambient temperature	[°C]	-40...100
Max. relative air humidity	[%]	98
Protection		IP 64; (on the housing: IP 67; on the shaft: IP 64)

RO6350

Incremental encoder with hollow shaft

RO-5000-I24/N1U

Tests / approvals		
Shock resistance		200 g
Vibration resistance		30 g
MTTF	[ANN]	190

Mechanical data		
Weight	[g]	444.4
Dimensions	[mm]	Ø 58 / L = 35.5
Materials		aluminium
Max. revolution, mechanical	[U/min]	12000
Max. starting torque	[Nm]	1
Reference temperature torque	[°C]	20
Shaft design		hollow shaft open to one side
Shaft diameter	[mm]	12
Shaft fit		H7
Shaft material		stainless steel
Installation depth of shaft	[mm]	10
Max. axial shaft misalignment	[mm]	1; (max. radial shaft alignment: ± 0,05 mm)

Electrical connection

Cable: 1 m, PUR; Maximum cable length: 300 m; radial, can also be used axially

brown	A
green	A inverted
grey	B
pink	B inverted
red	0 index
black	0 index inverted
blue	L+ sensor
white	0V sensor
brown/green	L+ (Up)
white/green	0V (Un)
screen	housing
lilac	failure inverted

Diagrams and graphs

Pulse diagram

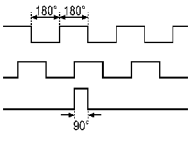

direction of rotation clockwise (looking at the shaft)