IG5667

Inductive sensor

IGK3005UBPKG/US-104-DPS

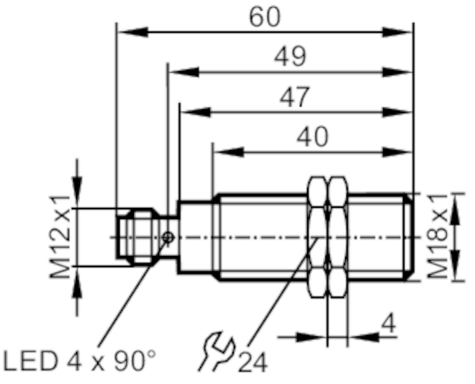

Product characteristics		
Electrical design		PNP
Output function		normally open
Sensing range	[mm]	5
Housing		threaded type
Dimensions	[mm]	M18 x 1 / L = 60
Application		
Special feature		Magnetic-field immune
Magnetic-field immune		yes
Electrical data		
Operating voltage	[V]	10...36 DC
Current consumption	[mA]	7.8; (24 V)
Protection class		II
Reverse polarity protection		yes
Outputs		
Electrical design		PNP
Output function		normally open
Max. voltage drop switching output DC	[V]	2.5
Permanent current rating of switching output DC	[mA]	250
Switching frequency DC	[Hz]	700
Short-circuit protection		yes
Type of short-circuit protection		pulsed
Overload protection		yes
Detection zone		
Sensing range	[mm]	5
Real sensing range Sr	[mm]	5 ± 10 %
Operating distance	[mm]	0...4.05

IG5667

Inductive sensor

IGK3005UBPKG/US-104-DPS

Accuracy / deviations			
Correction factor		steel: 1 / stainless steel: 0.7 / brass: 0.4 / aluminium: 0.3 / copper: 0.2	
Hysteresis	[% of Sr]	1...15	
Switch point drift	[% of Sr]	-10...10	
Operating conditions			
Ambient temperature	[°C]	-25...70	
Protection		IP 67	
Tests / approvals			
EMC		EN 60947-5-2	
		EN 55011	class B
MTTF	[years]	1434	
UL approval		Ta	0...40 °C
		Enclosure type	Type 1
		power supply	Hazardous voltage
		File number UL	E174191
Mechanical data			
Weight	[g]	69.4	
Housing		threaded type	
Mounting		flush mountable	
Dimensions	[mm]	M18 x 1 / L = 60	
Thread designation		M18 x 1	
Materials		brass white bronze coated; sensing face: plastics PTFE coated	
Displays / operating elements			
Display		switching status	1 x LED, yellow
Accessories			
Items supplied		lock nuts: 2	
Remarks			
Pack quantity		1 pcs.	

Electrical connection - plug

Connector: 1 x M12; coding: A

IG5667

Inductive sensor

IGK3005UBPKG/US-104-DPS
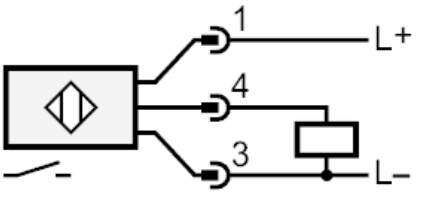
Connection