MN700S

RFID-coded safety sensor

MN35010-BPKG/CD/US

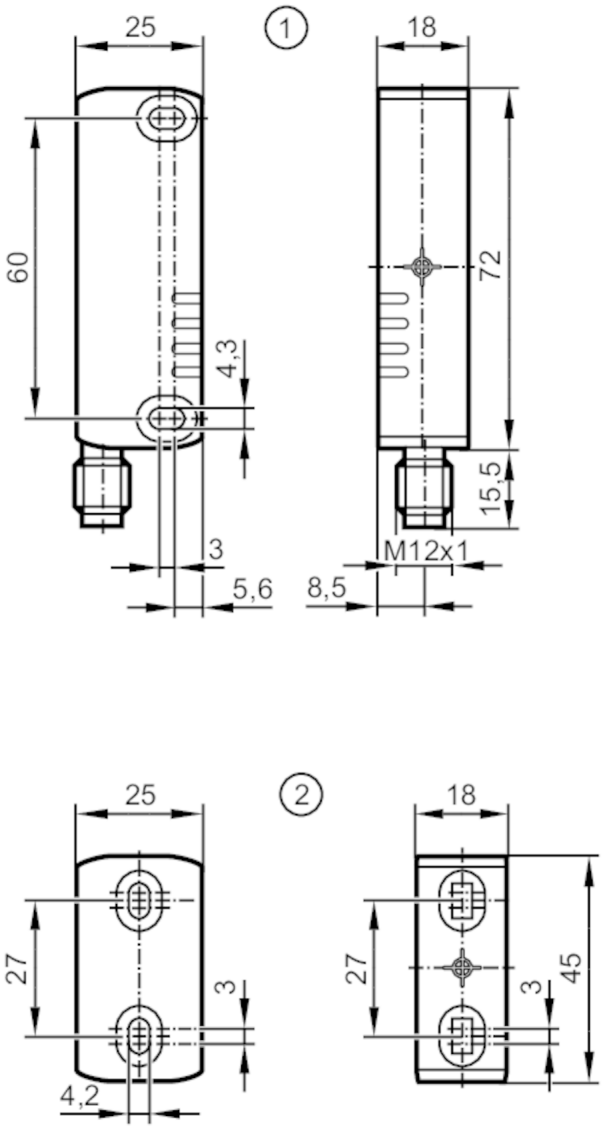

1 sensor
2 uniquely fully coded target

Product characteristics		
Electrical design		PNP
Output function		2 x OSSD, 1 x PNP
Sensing range	[mm]	12; (with defined actuator)
Housing		rectangular
Dimensions	[mm]	72 x 18 x 25

Application	
Design	coded target
Type of operation	permanent operation
Radio approval for	USA; Canada; Australia; EU/RED; China; Singapore
Note on radio approval	The list of countries applying the European Radio Equipment Directive 2014/53/EU (RED) can be found under “Downloads”.

MN700S

RFID-coded safety sensor

MN35010-BPKG/CD/US

Electrical data		
Operating voltage	[V]	20.4...26.4 DC
Rated insulation voltage	[V]	32
Operating current	[mA]	40...700
No-load current	[mA]	30
Current consumption	[mA]	< 50
Protection class		III
Reverse polarity protection		yes
Max. power-on delay time	[ms]	1500
Outputs		
Electrical design		PNP
Output function		2 x OSSD, 1 x PNP
Max. leakage current	[mA]	0.5
Permanent current rating of switching output DC	[mA]	50
Switching frequency DC	[Hz]	1
Output data		interface type C class 2
Short-circuit protection		yes
Overload protection		yes
Max. capacitive load CL_max	[nF]	200
Detection zone		
Sensing range	[mm]	12; (with defined actuator)
Safe switching-off distance s(ar)	[mm]	16
Accuracy / deviations		
Hysteresis	[%]	20
Repeatability analogue output	[%]	≤ 10; (% Sn)
Response times		
Response time to safety request	[ms]	160
Response time when approaching the enable zone	[ms]	600
Risk time (response time for safety-related faults)	[ms]	10
Operating conditions		
Applications		class C to EN 60654-1 weatherproof application
Ambient temperature	[°C]	-25...70
Note on ambient temperature		operational life ≤ 87600 h
Ambient temperature	[°C]	10...40
Note on ambient temperature		operational life ≤ 175200 h
Max. relative air humidity	[%]	briefly: 5...95 %; permanent: 5...70 %
Air pressure	[kPa]	80...106
Max. height above sea level	[m]	2000
Ionising radiation		not permissible
Salt spray		no

MN700S

RFID-coded safety sensor

MN35010-BPKG/CD/US

Protection		IP 67; IP 69K	
Tests / approvals			
EMC		IEC 60947-5-3	
Shock resistance		EN 60068-2-27	30 g (11 ms)
Vibration resistance		IEC 60068-2-6	10 g (10...55 Hz)
Safety classification			
Complies with the requirements		ISO 13849-1: 2015 category 4, PL e	
		IEC 62061 SIL 3	
Mission time TM	[h]	≤ 175200	
Mission time TM (additional indication)		20 years	
PFH	[1/h]	1,5E-09	
Mechanical data			
Weight	[g]	175.5	
Housing		rectangular	
Mounting		non-flush mountable	
Dimensions	[mm]	72 x 18 x 25	
Materials		PA	
Tightening torque	[Nm]	0.8...2	
Displays / operating elements			
Display		function	1 x LED, (ACT)
		input	1 x LED, (IN)
		Output	1 x LED, (OUT)
		operation	1 x LED, (PWR)
Accessories			
Items supplied		coded target	
		washers: 4	
		cover caps: 8	
Remarks			
Pack quantity		1 pcs.	

Electrical connection - plug

Connector: 1 x M12; coding: A; Moulded body: stainless steel (304/1.4301)

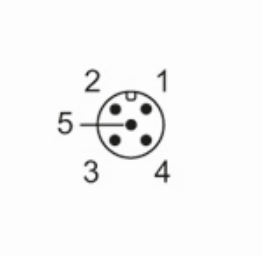

MN700S

RFID-coded safety sensor

MN35010-BPKG/CD/US

Connection

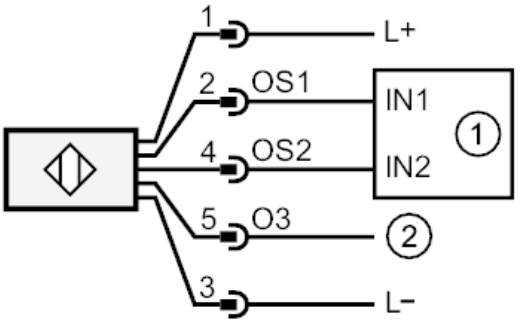

1:	safety-related logic unit
2:	Programmable Logic Controller (PLC)