E20928

Mounting set for reflectors

SYSTEM COMPONENT REFL ROD

Article no longer available - archive entry

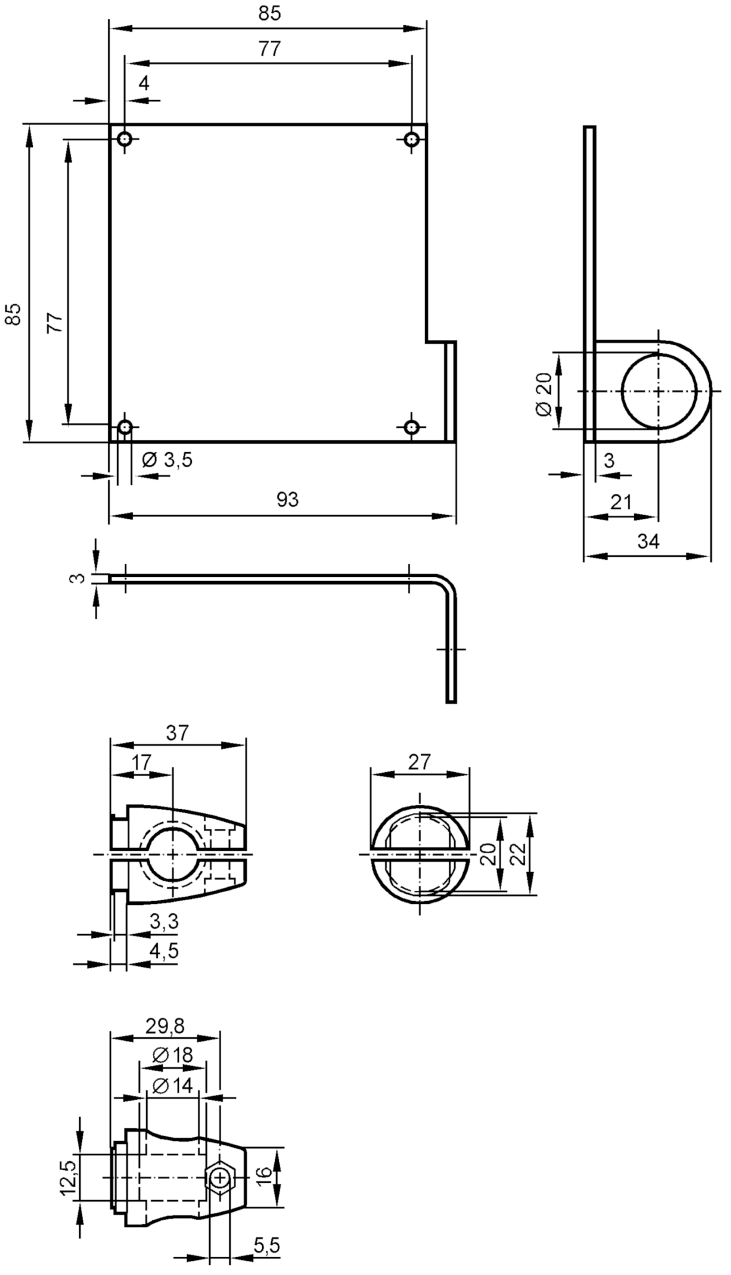

Application	
Design	for reflector
Mechanical data	
Type of mounting	Mounting rod; (Ø 14 mm)
Materials	fixture: stainless steel (316Ti/1.4571); Clamp: diecast zinc
Remarks	
Pack quantity	1 pcs.