PK6730

Pressure switch with intuitive switch point setting

PK-400-SFP14-HCPKG/US/ /W

Article no longer available - archive entry

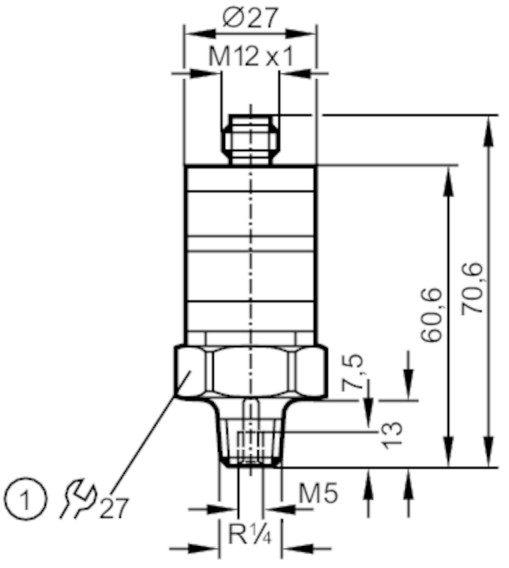

1 Tightening torque 25 Nm

Product characteristics			
Number of inputs and outputs		Number of digital outputs: 2	
Measuring range		0...400 bar	0...40 MPa
Process connection		threaded connection R 1/4 external thread internal thread:M5	
Application			
Application		for industrial applications	
Media		liquids and gases	
Medium temperature	[°C]	-25...80	
Min. bursting pressure		1600 bar	160 MPa
Pressure rating		600 bar	60 MPa
Type of pressure		relative pressure	
Electrical data			
Operating voltage	[V]	9.6...32 DC	
Current consumption	[mA]	< 25	
Min. insulation resistance	[MΩ]	100; (500 V DC)	
Protection class		III	
Reverse polarity protection		yes	
Inputs / outputs			
Number of inputs and outputs		Number of digital outputs: 2	
Outputs			
Total number of outputs		2	
Output signal		switching signal	
Electrical design		PNP	
Number of digital outputs		2	

PK6730

Pressure switch with intuitive switch point setting

PK-400-SFP14-HCPKG/US/ /W

Output function	complementary	
Max. voltage drop switching output DC [V]	2	
Permanent current rating of switching output DC [mA]	500	
Switching frequency DC [Hz]	100	
Short-circuit protection	yes	
Type of short-circuit protection	pulsed	
Overload protection	yes	
Measuring/setting range		
Measuring range	0...400 bar	0...40 MPa
Set point SP	20...400 bar	2...40 MPa
Reset point rP	12...392 bar	1.2...39.2 MPa
Accuracy / deviations		
Switch point accuracy [% of the final value]	< ± 2,5; (Setting accuracy)	
Repeatability [% of the final value]	< ± 0,5; (with temperature fluctuations < 10 K)	
Characteristics deviation [% of the final value]	< ± 1,5 (BFSL) / < ± 2,5 (LS); (BFSL = Best Fit Straight Line; LS = limit value setting)	
Temperature drift per 10 K	< ± 0.5	
Software / programming		
Adjustment of the switch point	setting rings	
Operating conditions		
Ambient temperature [°C]	-25...80	
Storage temperature [°C]	-40...100	
Protection	IP 67	
Tests / approvals		
EMC	EN 61000-4-2 ESD	4 kV CD / 8 kV AD
	EN 61000-4-3 HF radiated	10 V/m
	EN 61000-4-4 Burst	2 kV
	EN 61000-4-6 HF conducted	10 V
Shock resistance	DIN IEC 68-2-27	50 g (11 ms)
Vibration resistance	DIN IEC 68-2-6	20 g (10...2000 Hz)
Mechanical data		
Housing	cylindrical	
Dimensions [mm]	Ø 27 / L = 70.6	
Materials	PBT; PC; FKM; stainless steel (316L/1.4404)	
Materials (wetted parts)	stainless steel (316L/1.4404)	
Min. pressure cycles	50 million	
Process connection	threaded connection R 1/4 external thread internal thread:M5	
Restrictor element integrated	no (can be retrofitted)	

PK6730

Pressure switch with intuitive switch point setting

PK-400-SFP14-HCPKG/US/ /W

Displays / operating elements		
Display	operation	LED, green
	switching status	LED, yellow

Remarks	
Pack quantity	1 pcs.

Electrical connection

Connector: 1 x M12; coding: A
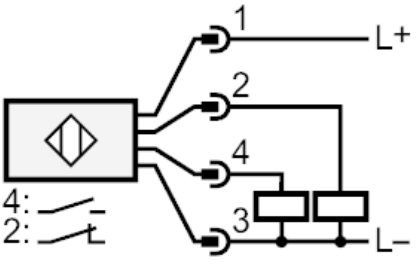
Connection