TS2229

Temperature cable sensor with bolt-on sensor

TS-PT100 CONTACT SENSOR

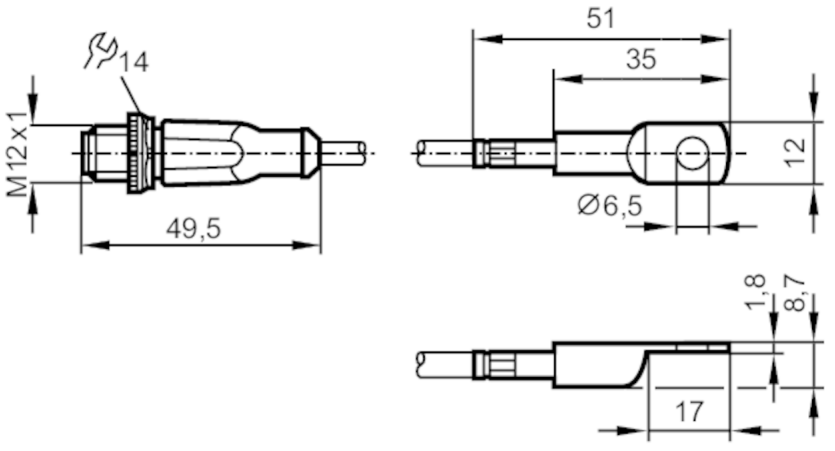

Product characteristics			
Measuring range		-40...90 °C	-40...194 °F
Process connection		bolt-on sensor 12 x 8,7 x 51 mm	
Application			
Special feature		Gold-plated contacts	
Measuring element		1 x Pt 100; (to DIN EN 60751, class A)	
Installation		surface mount RTD for solid bodies	
Electrical data			
Insulation rating	[V]	2500; (insulation between sensor housing and internal structure of the sensor)	
Protection class		III	
Measuring/setting range			
Measuring range		-40...90 °C	-40...194 °F
Accuracy / deviations			
Accuracy	[K]	± (0,15 K + 0,002 x|t|)	
Response times			
Dynamic response T05 / T09	[s]	9 / 15; (values for a flat aluminium surface (anodised) using a conductive heat paste; reference values for moving water : 10 / 24 (< 0,1 m/s))	
Operating conditions			
Protection		IP 67	
Tests / approvals			
MTTF	[years]	11415.5	
Mechanical data			
Weight	[g]	88.5	
Housing		bolt-on sensor	
Dimensions	[mm]	12 x 8.7 x 51	
Materials		stainless steel (1.4303 / 305 / 308); copper nickel-plated	
Process connection		bolt-on sensor 12 x 8,7 x 51 mm	

TS2229

Temperature cable sensor with bolt-on sensor

TS-PT100 CONTACT SENSOR

Remarks	
Pack quantity	1 pcs.

Electrical connection

Cable: 2 m, PUR, Ø 4.9 mm; 4 x 0.34 mm² (42 x Ø 0.1 mm)

Connector: 1 x M12; coding: A; Contacts: gold-plated
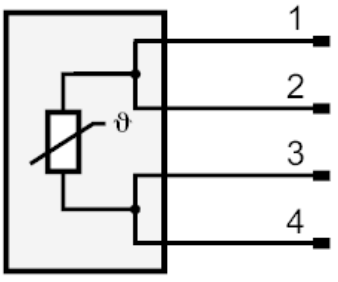
Connection