PC5194

Pressure transmitter

PT-010-SEG14-A-ZVG/US/ /W

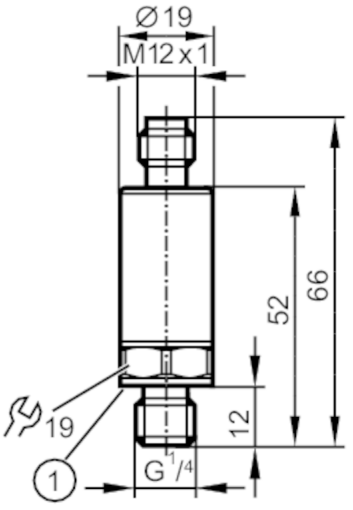

1 Sealing

Product characteristics		
Number of inputs and outputs		Number of analogue outputs: 1
Measuring range	[bar]	-1...10
Process connection		threaded connection G 1/4 external thread DIN EN ISO 1179-2
Application		
Application		for industrial applications
Media		liquids and gases
Medium temperature	[°C]	-25...70
Min. bursting pressure	[bar]	300
Pressure rating	[bar]	25
Note on pressure rating		static
Vacuum resistance	[mbar]	-1000
Type of pressure		relative pressure
Electrical data		
Operating voltage	[V]	8.5...36 DC
Min. insulation resistance	[MΩ]	100; (500 V DC)
Protection class		III
Reverse polarity protection		yes
Inputs / outputs		
Number of inputs and outputs		Number of analogue outputs: 1
Outputs		
Total number of outputs		1
Output signal		analogue signal
Number of analogue outputs		1
Analogue current output	[mA]	4...20
Max. load	[Ω]	755; (Ub = 24 V; (Ub - 8,5 V) / 20,5 mA)
Short-circuit proof		yes

PC5194

Pressure transmitter

PT-010-SEG14-A-ZVG/US/ /W

Overload protection		yes
Measuring/setting range		
Measuring range	[bar]	-1...10
Accuracy / deviations		
Repeatability	[% of the span]	< ± 0,05; (with temperature fluctuations < 10 K)
Characteristics deviation	[% of the span]	< ± 0,8; (incl. drift when overtightened, zero point and span error, non-linearity, hysteresis)
Linearity deviation	[% of the span]	< ± 0,1 (BFSL) / < ± 0,2 (LS)
Hysteresis deviation	[% of the span]	< ± 0,2
Long-term stability	[% of the span]	< ± 0,1; (per 6 months)
Temperature coefficient zero point and span	[% of the span / 10 K]	< 0,25 (-25...70 °C)
Response times		
Step response time analogue output	[ms]	1
Operating conditions		
Ambient temperature	[°C]	-25...70
Storage temperature	[°C]	-25...70
Protection		IP 67; IP 69K
Tests / approvals		
EMC		DIN EN 61000-6-2
		DIN EN 61000-6-3
Shock resistance		DIN EN 60068-2-27 — 500 g (11 ms)
Vibration resistance		DIN EN 60068-2-6 — 20 g (10...2000 Hz)
MTTF	[years]	787
UL approval		UL Approval no. — J027
		File number UL — E174189
Pressure Equipment Directive		Sound engineering practice; can be used for group 2 fluids; group 1 fluids on request
Mechanical data		
Weight	[g]	58.2
Materials		1.4542 (17-4 PH / 630); stainless steel (1.4404 / 316L); PEI
Materials (wetted parts)		1.4542 (17-4 PH / 630)
Min. pressure cycles		60 million; (at 1.2 times nominal pressure)
Tightening torque	[Nm]	25...35; (recommended tightening torque; depends on lubrication, seal and pressure rating)
Process connection		threaded connection G 1/4 external thread DIN EN ISO 1179-2
Process connection sealing		FKM (DIN EN ISO 1179-2)
Restrictor element integrated		no (can be retrofitted)
Remarks		
Remarks		BFSL = Best Fit Straight Line
		LS = limit value setting
Pack quantity		1 pcs.

PC5194

Pressure transmitter

PT-010-SEG14-A-ZVG/US/ /W

Electrical connection

Connector: 1 x M12; coding: A

Connection

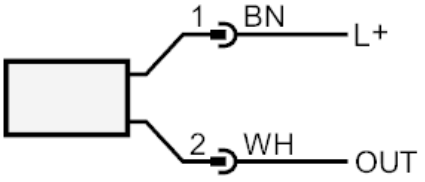

OUT	analogue output colours to DIN EN 60947-5-2 Core colours :
BN	brown
WH	white