E30075

Thread extension

THREAD EXTENSION G1/8

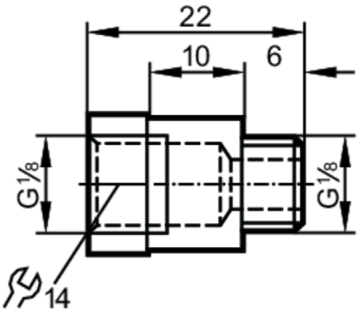

Tests / approvals	
Pressure Equipment Directive	A possible classification to PED depends on the application and has to be carried out by the user / operator.
Safety instructions	The compatibility between medium and product material has to be checked in all applications.

Mechanical data		
Weight	[g]	56.5
Materials		brass nickel-plated; Sealing: NBR
Sensor connection		G 1/8
Process connection		threaded connection G 1/8

Accessories	
Items supplied	O-rings: 1

Remarks	
Pack quantity	4 pcs.