ZB0071

Safety rope emergency stop switch

Rope Switch DH LED 110V AC

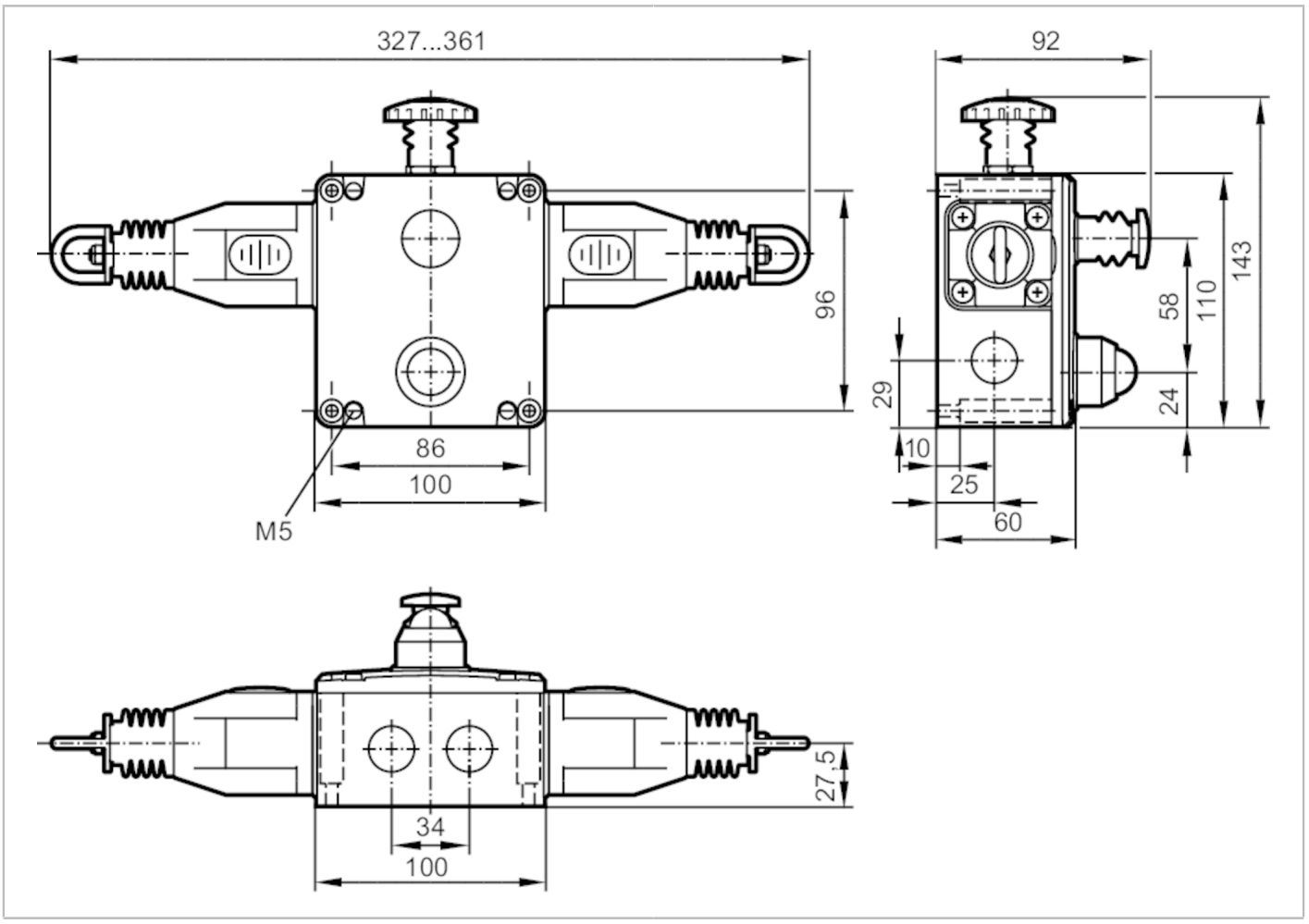

Electrical data			
Operating voltage	[V]	110...240 AC / 5...24 DC; (LED)	
Rated insulation voltage	[V]	500	
Outputs			
Electrical design		snap-action contact; max. switching voltage: 240 V; switching capacity: 720 VA; thermal current: 10 A	
Output function		auxiliary contact	2 x normally open
		safety contact	4 x NC
Minimum load current	[mA]	5; (5 V DC)	
Contact rating		3 A (240 V AC) / 6 A (120 V AC) / 2,5 A (24 V DC); (inductive load)	
Short-circuit protection		no	
Operating conditions			
Ambient temperature	[°C]	-25...80	
Protection		IP 67	
Tests / approvals			
Shock resistance			15 g / 11 ms
Vibration resistance			10-500 Hz

ZB0071

Safety rope emergency stop switch

Rope Switch DH LED 110V AC

Mechanical data			
Weight	[g]	1527.5	
Materials		housing: diecast aluminium yellow; switching contact: silver-plated	
Information on service life		Switching cycles (mechanical):	> 1.000.000
Installation position		any	
Rope span		125 m; (per side)	
Activation force	[N]	< 125; (tension force: 130 N)	

Displays / operating elements		
Display	operation	LED, green
	errors	LED, red flashing

Electrical connection	
Required protection	10 A; fast acting

Remarks	
Remarks	For information about installation and operation please see the operating instructions.
Pack quantity	1 pcs.

Electrical connection

terminals: ...2.5 mm²
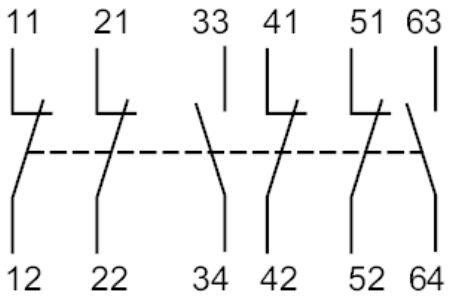
Connection