ifm electronic

IO-Link display: process values at a glance

More plant transparency and service information on site

- **Four measured values / text displays and four message windows for free text**
- **Colour change for text and background**
- **Flexible adaptation of the display, also during operation**
- **IO-Link 1.1 compatible**
- **Easy integration into each IO-Link structure**

More plant transparency

The IO-Link display is a flexible solution to display process values, texts and messages in a plant. It displays up to four assigned process values, alarms and warnings. Clear text and as an option a colour change of text and background can be used for a quick overview.
By means of buttons the user can trigger control actions of the PLC or acknowledge messages.

Easy integration

The IO-Link display is connected to an IO-Link master and controlled via PLC. No special software is required for configuration.
Texts and settings can be predetermined via an IO-Link device tool such as LINERECORDER SENSOR. Texts and settings can be adapted even during operation via the PLC.

Dimensions

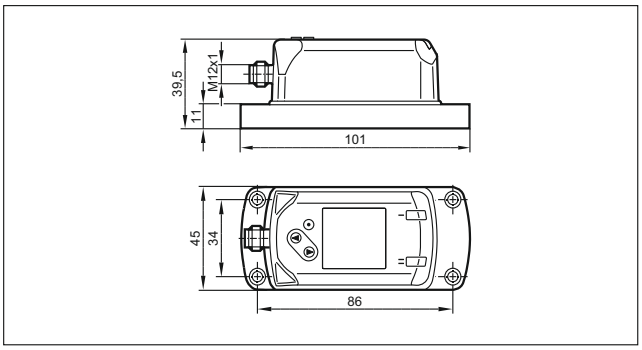

Wiring

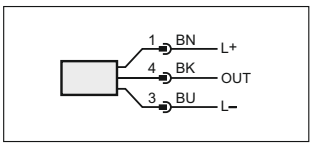

Resolution pixels	Display type	Display illumination	Order no.
1.44“ colour display			
128 x 128	TFT	LED	**E30391**

Technical data

IO-Link display E30391		
Operating voltage	[V DC]	18...30
Current consumption	[mA]	< 47
Protection rating / protection class		IP 65, IP 67 / III
Reverse polarity protection		•
Communication interface IO-Link device Type of transmission IO-Link revision SDCI standard		 COM2 (38.4 kbaud) 1.1 IEC 61131-9
Ambient temperature	[°C]	0...60
EMC		EN 61000-6-2 EN 61000-6-4
Shock resistance	[g]	20 (11 ms)
Vibration resistance	[g]	20 (10...50 Hz)
Housing materials		Stainless steel (303/1.4305); PC; PBT-GF 30; PPS; PA 6.6; FKM
Connection		M12 connector

Connection technology

Type	Description	Order no.
	M12 jumper 1 m black, PUR cable	**EVC042**
	M12 jumper 2 m black, PUR cable	**EVC043**
	M12 jumper, 3 m black, PUR cable	**EVC102**
	M12 jumper, 5 m black, PUR cable	**EVC044**
	M12 jumper, 10 m black, PUR cable	**EVC493**

ifm article no. 78001710 · We reserve the right to make technical alterations without prior notice. · 11.2015