SI5004

Flow transmitter

SID10ADB10OG/

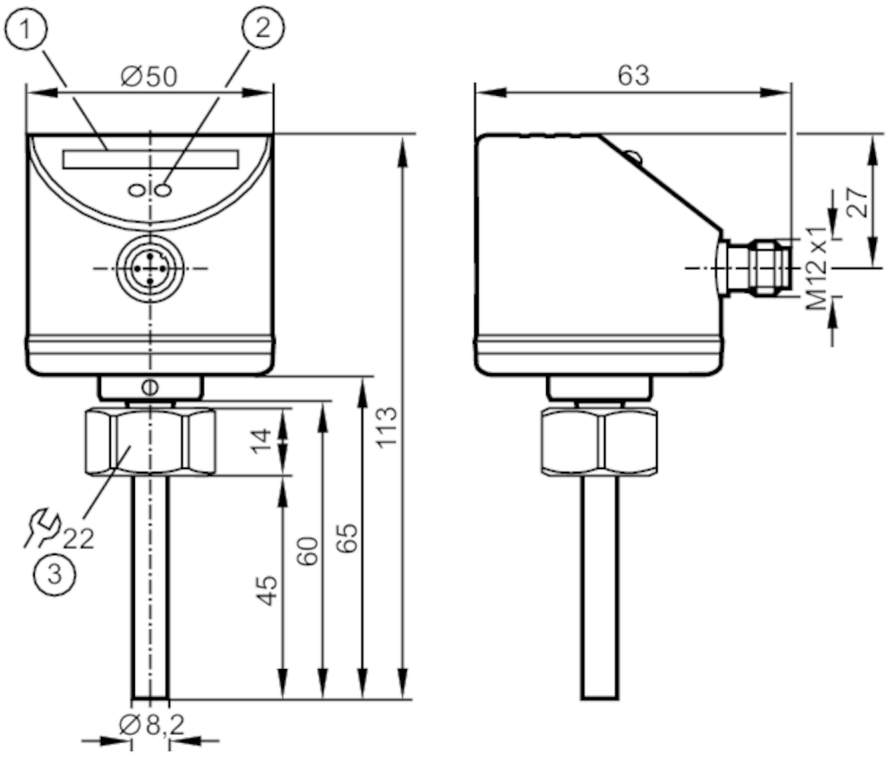

1 LED bar display
2 setting pushbutton
3 Tightening torque 25 Nm

Product characteristics		
Number of inputs and outputs		Number of analogue outputs: 1
Process connection		M18 x 1,5 internal thread
Application		
Media		Liquids
Medium temperature	[°C]	-25...80
Pressure rating	[bar]	300
MAWP (for applications according to CRN)	[bar]	208
Liquids		
Medium temperature	[°C]	-25...80
Electrical data		
Operating voltage	[V]	19...36 DC
Current consumption	[mA]	< 60
Protection class		III
Reverse polarity protection		yes
Power-on delay time	[s]	10
Inputs / outputs		
Number of inputs and outputs		Number of analogue outputs: 1

SI5004

Flow transmitter

SID10ADB10OG/

Outputs			
Total number of outputs		1	
Output signal		analogue signal	
Number of analogue outputs		1	
Analogue current output	[mA]	4...20	
Max. load	[Ω]	500	
Overload protection		yes	
Measuring/setting range			
Probe length L	[mm]	45	
Liquids			
Setting range	[cm/s]	3...300	
Greatest sensitivity	[cm/s]	3...100	
Accuracy / deviations			
Repeatability	[cm/s]	1...5	
Note on repeatability		for water 5...100 cm/s; 25 °C	
		Factory setting	
Temperature drift	[cm/s x 1/K]	0.1; (for water 5...100 cm/s; 10...70 °C)	
Measuring error	[% of the final value]	± 2...± 10	
Response times			
Response time	[s]	1...10	
Liquids			
Response time	[s]	1...10	
Operating conditions			
Ambient temperature	[°C]	-25...80	
Storage temperature	[°C]	-25...100	
Protection		IP 67	
Tests / approvals			
EMC		DIN EN 61000-6-2	
		DIN EN 61000-6-3	
Shock resistance		DIN EN 60068-2-27	50 g (11 ms)
Vibration resistance		DIN EN 60068-2-6	20 g (55...2000 Hz)
MTTF	[years]	259	
Mechanical data			
Weight	[g]	230	
Dimensions	[mm]	M18 x 1.5	
Thread designation		M18 x 1.5	
Materials		stainless steel (316L/1.4404); stainless steel (304/1.4301); PC; PBT-GF20; EPDM/X	
Materials (wetted parts)		stainless steel (316L/1.4404); O-ring: FKM 80 Shore A	
Process connection		M18 x 1,5 internal thread	
Displays / operating elements			
Display		function	10 x LED, three-colour

SI5004

Flow transmitter

SID10ADB10OG/

Remarks

Pack quantity	1 pcs.

Electrical connection

Connector: 1 x M12; coding: A

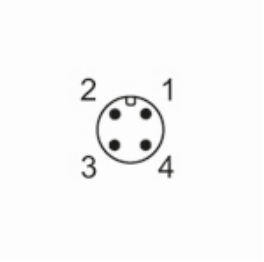
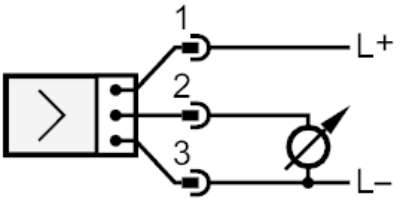
Connection