E40234

Grounding clamp

FE-GND-CLIP /4 PIECE SET

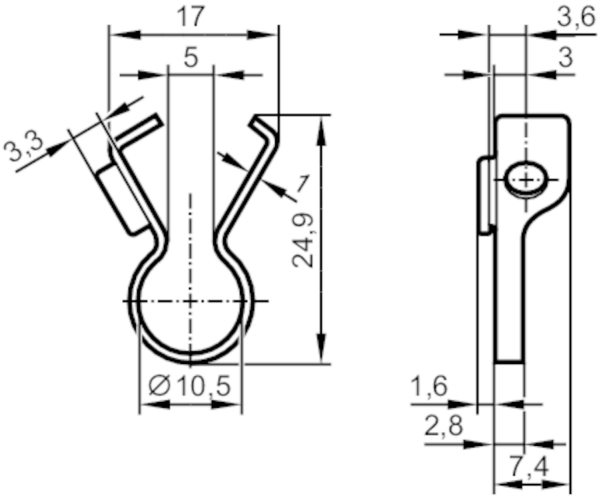
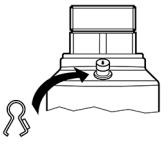
Application		
Installation		for units with M12 connector
Mechanical data		
Weight	[g]	6.7
Materials		stainless steel (316L/1.4404)
Remarks		
Pack quantity		1 pcs.
Diagrams and graphs		
Installation