ifm electronic

CE

Original operating instructions
Fail-safe inductive sensor

efector100

**GM705S**

UK

80005494 / 00 05 / 2013

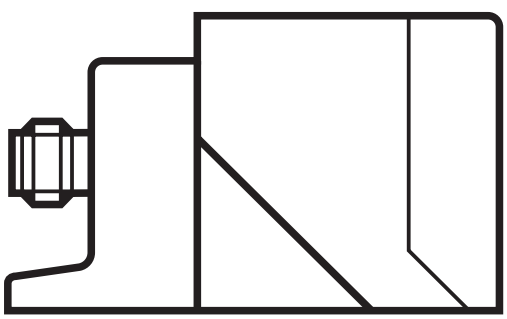

# Contents


1 Preliminary note ..... 3
1.1 Explanation of symbols ..... 3
2 Safety instructions ..... 4
2.1 Safety-related requirements regarding the application ..... 4
3 Items supplied ..... 5
4 Functions and features ..... 5
5 Function ..... 6
5.1 Enable zone ..... 6
5.2 Protection against simple defeating ..... 7
6 Installation ..... 8
6.1 Alignment of the sensing face ..... 8
6.2 Installation conditions ..... 8
7 Electrical connection ..... 10
8 Set-up ..... 10
8.1 Setting aid ..... 10
8.2 Determine the enable zone ..... 11
8.3 Deactivate setting aid ..... 11
9 Operation ..... 12
9.1 Switching state of the outputs ..... 12
9.1.1 The safe state ..... 12
9.1.2 The switched state ..... 12
9.1.3 Output characteristics ..... 12
9.1.4 Cross faults ..... 12
9.2 Operating mode ..... 13
9.2.1 Delayed switching of the LED ..... 13
9.2.2 Switching of the LED without delay ..... 14
9.3 Response times ..... 14
9.4 LED display ..... 16
10 Technical data ..... 17
11 Troubleshooting ..... 19
12 Maintenance, repair and disposal ..... 19

13 Approvals / standards ..... 20
14 Terms and abbreviations ..... 20

# 1 Preliminary note

The instructions are part of the unit. They are intended for authorised persons according to the EMC and Low Voltage Directives and safety regulations.
The instructions contain information about the correct handling of the product.
Read the instructions before use to familiarise yourself with operating conditions, installation and operation.
Follow the safety instructions.

UK

## 1.1 Explanation of symbols

▶ Instructions

→ Cross-reference

Important note
Non-compliance can result in malfunction or interference.

Information
Supplementary note.

● LED on

○ LED off

LED flashes (2 Hz)

LED flashes quickly (5 Hz)

# 2 Safety instructions

- Follow the operating instructions.
- Improper use may result in malfunctions of the unit. This can lead to personal injury and/or damage to property during operation of the machine. For this reason note all remarks on installation and handling given in this document. Also adhere to the safety instructions for the operation of the whole installation.
- In case of non-observance of notes or standards, especially when tampering with and/or modifying the unit, any liability and warranty is excluded.
- If the sensor is damaged, the safety function cannot be guaranteed.
- Errors caused by damage cannot be detected by the sensor.
- The unit must be installed, connected and put into operation by a qualified electrician trained in safety technology.
- The applicable technical standards for the corresponding application must be complied with.
- For installation the requirements according to EN 60204 must be observed.
- In case of malfunction of the unit please contact the manufacturer. Tampering with the unit is not allowed.
- Disconnect the unit externally before handling it. Also disconnect any independently supplied relay load circuits.
- After installation, maintenance or repair of the system perform a complete function check.
- Use the unit only in specified environmental conditions (→ 10 Technical data). In case of special operating conditions please contact the manufacturer.
- Use only as described below (→ 4).

## 2.1 Safety-related requirements regarding the application

It must be ensured that the safety requirements of the respective application correspond to the requirements stated in these instructions.

Observe the following requirements:

▶ Take measures to avoid metallic objects being placed on the sensing face unintentionally.

▶ Adhere to EN 1088 for interlocking devices associated with guards.

- ▶ Adhere to the specified operating conditions (→ 10 Technical data).
  Use of the sensor in the vicinity of chemical and biological media as well as ionising radiation is not permitted.
- ▶ Adhere to the principle of normally closed operation for all external safety circuits connected to the system.
- ▶ In case of faults within the fail-safe sensor which result in the defined safe state: take measures to maintain the safe state when the complete control system continues to be operated.
- ▶ Replace damaged units.



# 3 Items supplied

1 fail-safe sensor GM705S with premounted angle bracket,
1 Allen key for fixing the fail-safe sensor onto the angle bracket
1 original operating instructions GM705S, ident no. 80005494.

If one of the above-mentioned components is missing or damaged, please contact one of the ifm branch offices.

# 4 Functions and features

The fail-safe inductive sensor GM705S detects metal without contact.

Safety function SF: the safe state (output stage switched off; logic "0") is achieved when undamping greater than or equal to the safe switch-off distance $s_{ar}$. (→ 10 Technical data).
Also observe the notes on installation of the sensor (→ 6 Installation).

The fail-safe sensor conforms to Performance Level e according to EN ISO 13849-1:2008 as well as to the requirements SIL 3 to IEC 61508 and meets SILcl 3 to IEC 62061.

The unit corresponds to the classification I2C40SP2 to IEC 60947-5-2 for non-flush installation (→ 6 Installation).

The fail-safe inductive sensor has been certified by TÜVNord.

# 5 Function

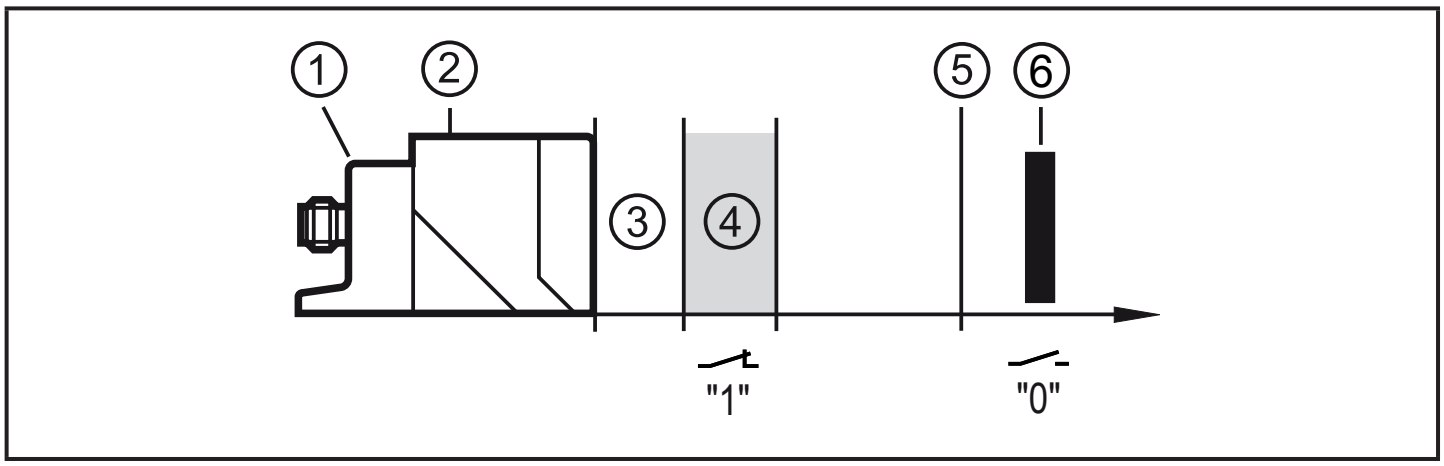


1: fail-safe sensor
2: dual LED: signal (yellow); power (green)
3: close zone
4: enable zone
5: safe switch-off distance $s_{ar}$
6: target

## 5.1 Enable zone

The outputs (OSSD) are only enabled when a damping target is present in the enable zone. Outside this enable zone the outputs remain switched off.

The safe switch-off distance $s_{ar}$ is > 45 mm.

The enable zone is different if damping elements which deviate from the standard target plate in terms of material, form and size are used.

Enable zone for selected materials*:

| Material | Enable zone |
|---|---|
| FE360 (= mild steel) | 4...20 mm |
| Stainless steel | 2.0...17.6 mm |
| AlMg3G22 | 0...9.6 mm |
| Al 99 % | 0...8.6 mm |
| CuZn37 | 0...10.0 mm |
| Copper | 0...7.0 mm |

* Typical values for damping with a reference target of 60 x 60 x 1 mm and non-flush installation to IEC 60947-5-2 at an ambient temperature of 20 °C.

Depending on the characteristics of the damping element there may be no close zone.

## 5.2 Protection against simple defeating

The fail-safe sensor reacts to metal objects, e.g. the frame of a safety door. Other metal objects that are not intended to enable the sensor must not be allowed to enable the fail-safe sensor unintentionally.

▶ Take measures to prevent metal objects, except the designated target, from being placed on the sensing face or in the enable zone unintentionally.

In addition, the sensor has the following switching characteristics to make simple defeating of its safety function more difficult:



1. By slowly introducing a metallic object into the enable zone, the outputs are immediately switched, but displayed by the LED with a delay of approx. 3 s (→ 9.2.1 Delayed switching of the LED). By doing so, the object is generally in the close range before the LED indication is lit. The technical instructions concerning the restart of the installation must be observed.
2. If the object remains in the close zone for over approx. 2 s, the outputs are completely disabled and no longer enabled in case of damping in the enable zone. If the object stays in the close range for longer than approx. 5 s, the adjustment mode is activated (→ 8.1 Setting aid).

   Release of the enable zone can be carried out
   • either by undamping (> 45 mm) for a time of more than 2 s
   • or by a voltage interruption
   (→ 8.3 Deactivate setting aid).

# 6 Installation

## 6.1 Alignment of the sensing face

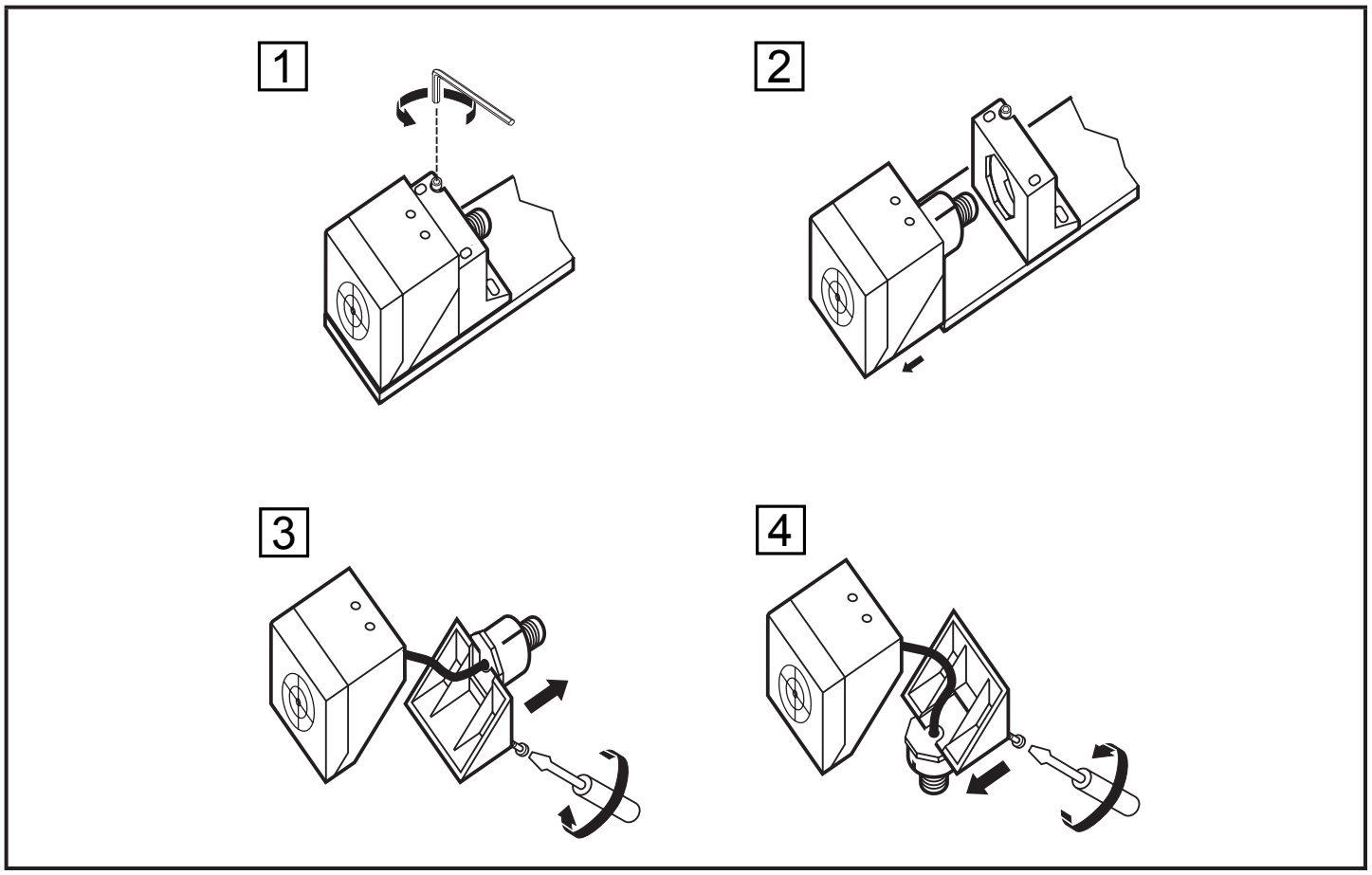


The socket is rotatable:

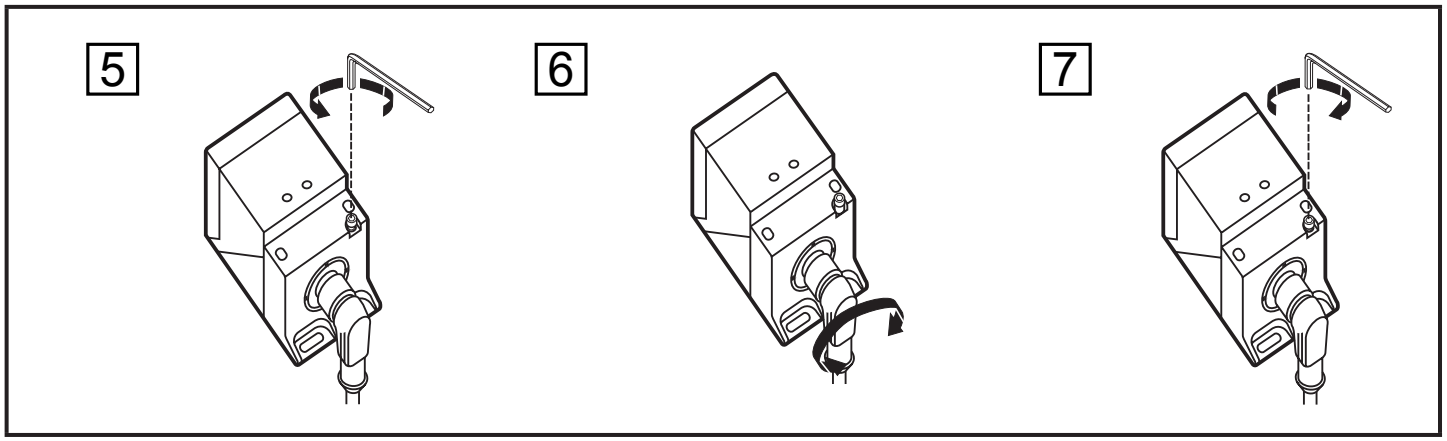


▶ Tighten the socket according to the manufacturer's indications. Observe the tightening torque for the ifm socket (e.g. EVxxxx: 0.6...1.5 Nm).

## 6.2 Installation conditions

The unit is non-flush mountable according to IEC 60947-5-2, type I2C40SP2.

Flush installation of the fail-safe sensor is not permitted since this can result in an increase of the sensing range up to enabling of the outputs (OSSDs).

- ▶ Ensure the unit cannot work loose.
- ▶ Tighten captive screws with 1 Nm.
- ▶ Limit the use of oblong holes to the initial setting.
- ▶ Adhere to the installation conditions in accordance with the figures 1 to 5:

1

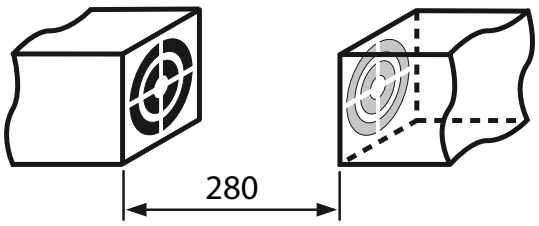


2

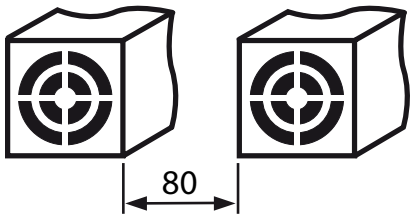


3

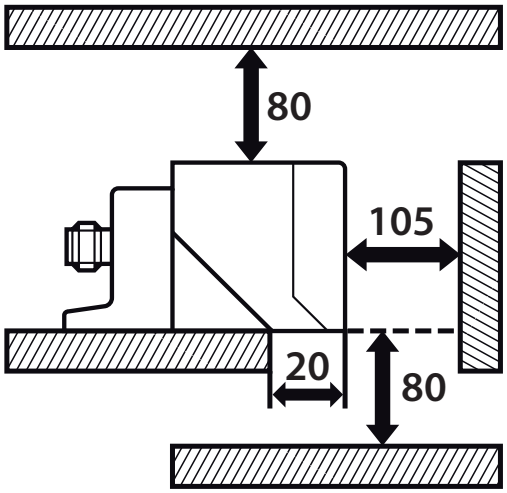


Angle mounting

4

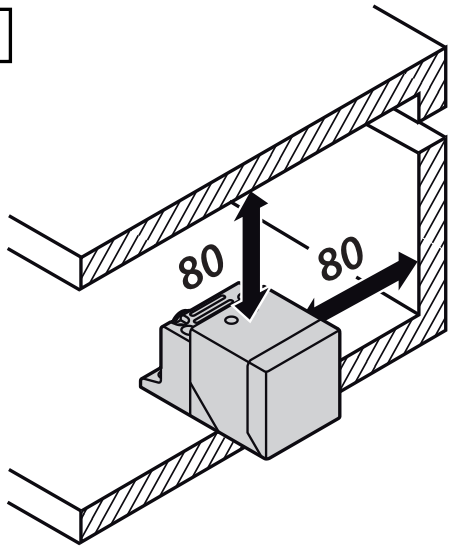


Channel mounting

5

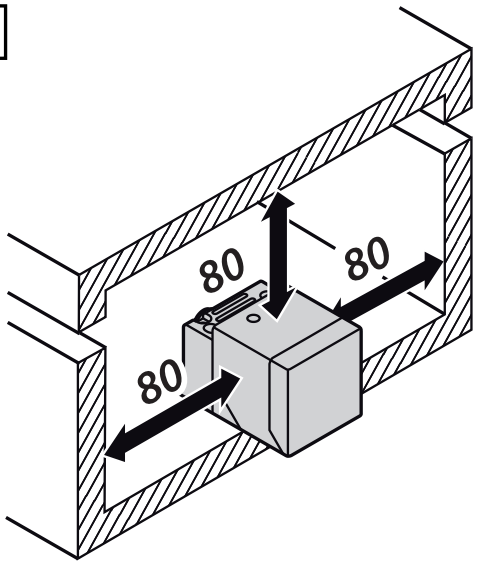


UK

# 7 Electrical connection

Wiring diagram → 10 Technical data

- ▶ Disconnect power. Also disconnect any independently supplied relay load circuits.
- ▶ Supply voltage: connect L+ to pin 1 and L- to pin 3 of the connector.

The nominal voltage is 24 V DC. This voltage may vary between 19.2 V and 30 V incl. 5 % residual ripple to EN 61131-2.

A safe industrial power supply with overvoltage protection must be used. In case of a fault, 42 V AC / 60 V DC must not be exceeded.

# 8 Set-up

## 8.1 Setting aid

For easy and reliable installation the sensor features an optical setting aid to visualise the enable zone.

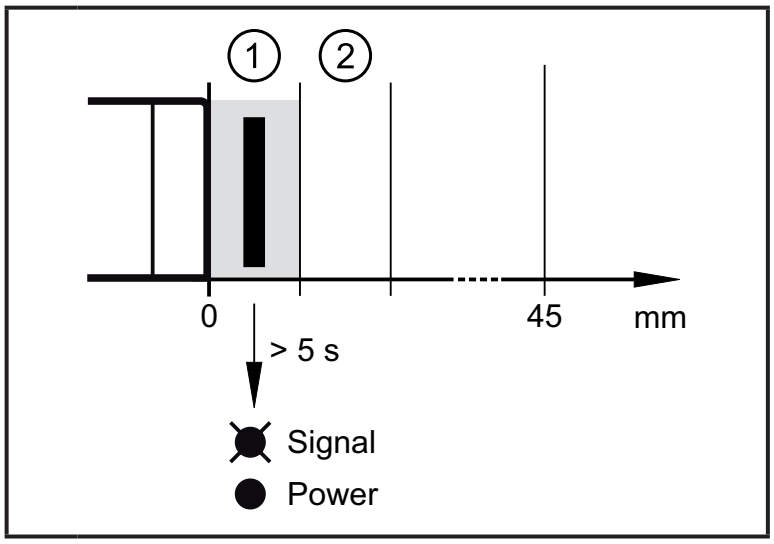


The setting aid is activated by placing a metal object in front of the fail-safe sensor (close range).

After approx. 5 s the yellow LED starts to flash: the setting aid is active.

While this mode is active, the output remains in the safe state ("0").

1: close zone
2: enable zone

## 8.2 Determine the enable zone

When the setting aid is active, the enable zone can be determined by moving the target (or the sensor if the target is fixed).

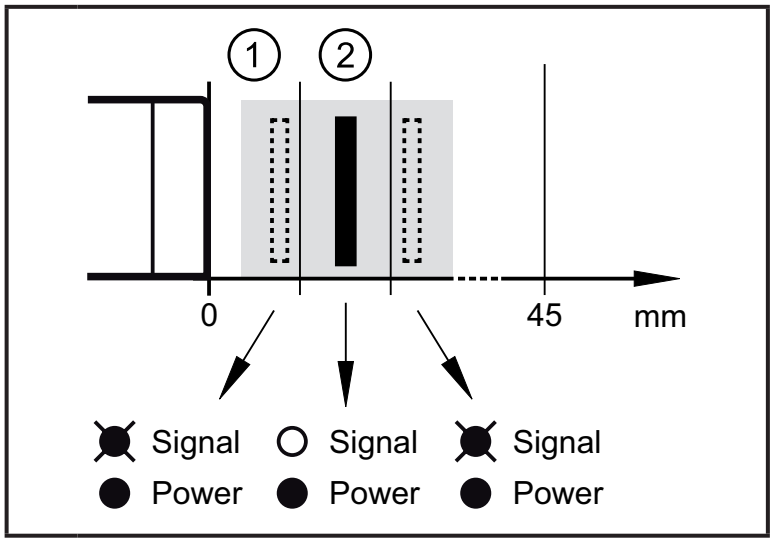


As soon as the target enters the enable zone, the yellow LED goes out.

If the target is just outside the enable zone in either direction the LED starts to flash again.

1: close zone
2: enable zone

## 8.3 Deactivate setting aid

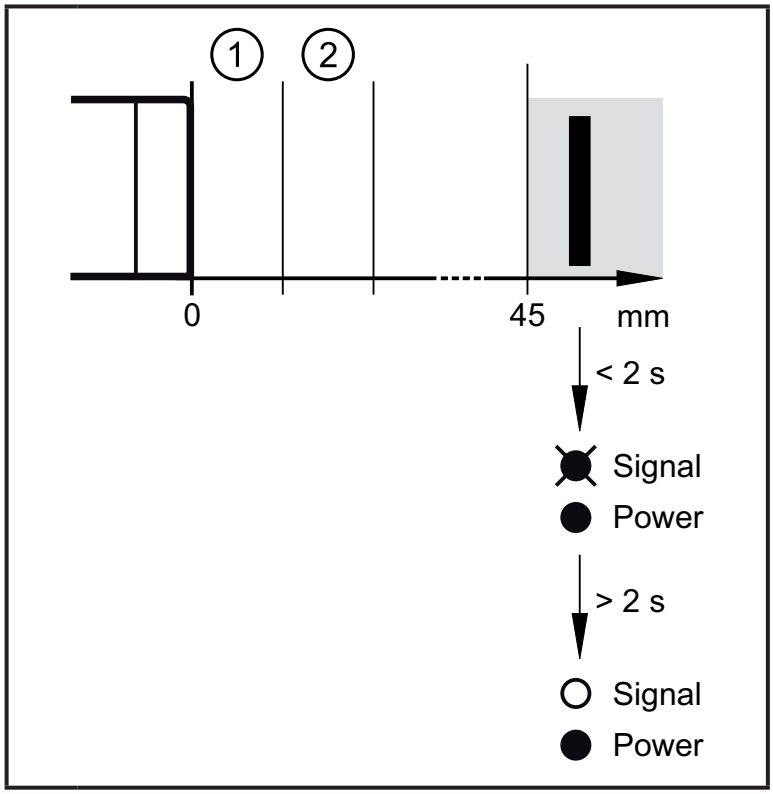


If the sensor is undamped for more than 2 s (> 45 mm), the setting aid is switched off and the yellow LED goes out.

This can also be achieved by power off.

1: close zone
2: enable zone

# 9 Operation

## 9.1 Switching state of the outputs

### 9.1.1 The safe state

The safe state is when at least one of the outputs A1 or A2 (OSSDs) is switched off (zero-current state: logic "0").
If one of the outputs A1 or A2 is switched off, the subsequent safety-related logic unit must bring the complete system into the state defined as safe.

### 9.1.2 The switched state

If the damping element is in the enable zone and if there is no sensor error, both outputs A1 and A2 (OSSDs) are enabled (logic "1").

### 9.1.3 Output characteristics

The output characteristics are compatible with the input characteristics to EN 61131-2 type 1 or 2:

| | | |
|---|---|---|
| Logic "1" | ≥ 15 V | 2...15 mA |
| | ≥ 11 V | 15...30 mA |
| Logic "0" | ≤ 5 V | leakage current 0.2 mA *) |

*) pull-down current typ. 30 mA

### 9.1.4 Cross faults

- A cross fault between both outputs (A1 and A2) is detected by the fail-safe sensor and results in the outputs (OSSD) being switched off at the next safety request. The outputs A1 and A2 remain switched off until the error has been removed.
- A cross fault between one of the two outputs (A1 or A2) and the supply voltage leads to switching off the other output (A2 or A1) in case of a safety request.

## 9.2 Operating mode

The length of the preceding undamping determines whether the yellow LED comes on with a delay (→ 9.2.1) or without delay (→ 9.2.2) when a target moves into the enable zone. In any case, the outputs switch on without delay.

In case of undamping the outputs switch off and the yellow LED goes out without delay.

In case of damping in the close range the outputs switch off immediately whereas the yellow LED goes out with a delay of approx. 2 s. When the LED goes out the outputs are maintained in the safe state ("0"). Thus, switching on again in the enable zone is not possible. Enabling is done by undamping (> 45 mm) of more than 2 s or by interrupting the voltage (→ 5.2 Protection against simple defeating).



### 9.2.1 Delayed switching of the LED

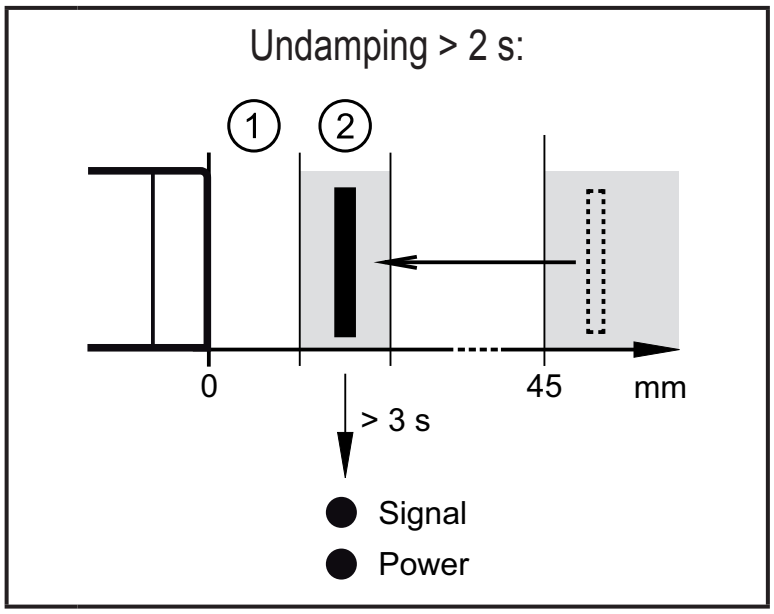


If the target was away from the sensor for more than approx. 2 s (> 45 mm), the yellow LED goes on with a delay of approx. 3 s in case of damping in the enable zone.

This is also the case if the target is in the enable zone when the voltage is switched on.

1: close zone
2: enable zone

### 9.2.2 Switching of the LED without delay

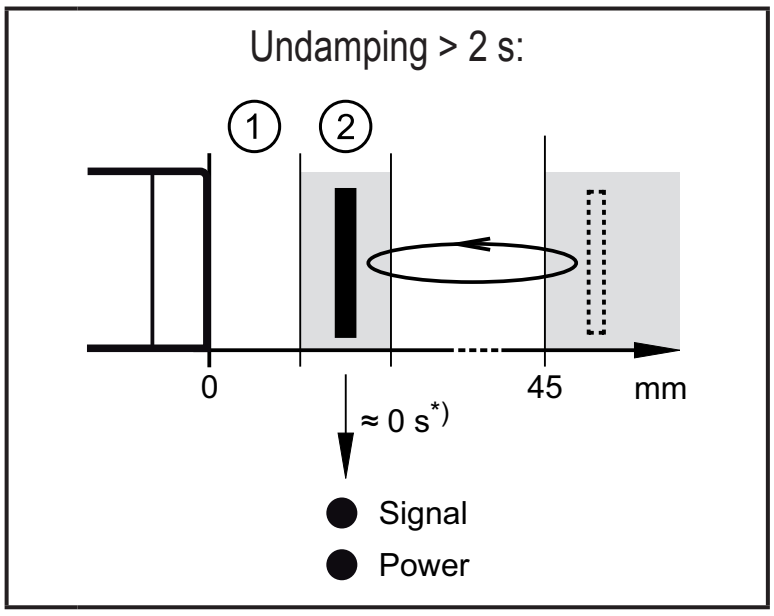


If the target was away from the sensor for less than 2 s (> 45 mm), the yellow LED comes on without delay in case of damping in the enable zone.

1: close zone
2: enable zone

*) except for the first start-up

## 9.3 Response times

| | |
|---|---|
| Response time on safety request (removal from the enable zone) | ≤ 50 ms |
| Response time when approaching the close range (non safety-related zone) | ≤ 100 ms |
| Response time when approaching the enable zone (enable time) | typ. 100 ms<br>≤ 200 ms |
| Risk time / response time for safety-related faults | ≤ 100 ms |
| Permissible dwell time in the close range | approx. 2 s |
| Delay time to activate the adjustment mode (→ 8.1 Setting aid) | approx. 5 s |
| Dwell time in the undamped condition (≥ 45 mm) to return into the operating mode (→ 8.3 Deactivate setting aid) | approx. 2 s |
| Simultaneity of switching on and off of the outputs in case of a safety request | ≤ 50 ms |
| Duration of switch-off test pulses on output A1/A2: (1) | min. 250 µs<br>max. 1 ms |
| Sequence of the switch-off test pulses (2) | min. 2 ms<br>max. 5 ms |

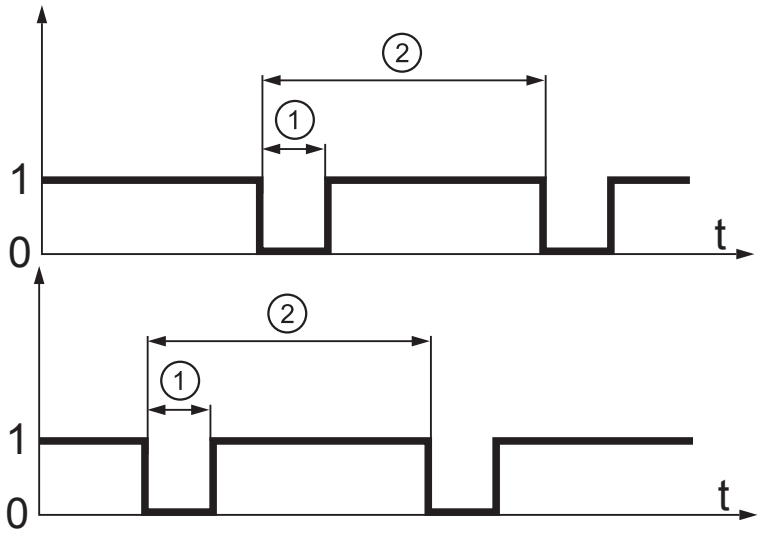


1: switch-off test pulse
2: sequence of the switch-off test pulses

| | |
|---|---|
| Repetition rate of this pulse package | min. 30 ms |
| | max. 50 ms |

UK

## 9.4 LED display

| LED | | Operating status | Outputs | A1 (OSSD) | A2 (OSSD) |
|---|---|---|---|---|---|
| ○<br>○ | Signal<br>Power | No voltage supply | Both outputs switched off | 0 | 0 |
| ○<br>✱ | Signal<br>Power | Undervoltage | | 0 | 0 |
| ○<br>✳ | Signal<br>Power | Overvoltage | Both outputs switched off | 0 | 0 |
| ○<br>● | Signal<br>Power | Taget outside the enable zone (operating mode) or in the enable zone (adjustment mode) | Both outputs switched off | 0 | 0 |
| ●<br>● | Signal<br>Power | Target in the enable zone (operating mode) | Both outputs enabled | 1 | 1 |
| ✱<br>● | Signal<br>Power | Target outside the enable zone (adjustment mode) | Both outputs switched off | 0 | 0 |
| ✱<br>○ | Signal<br>Power | Internal or external fault (→ 11 Troubleshooting) | | 0<br>0<br>1 | 0<br>1<br>0 |

# 10 Technical data



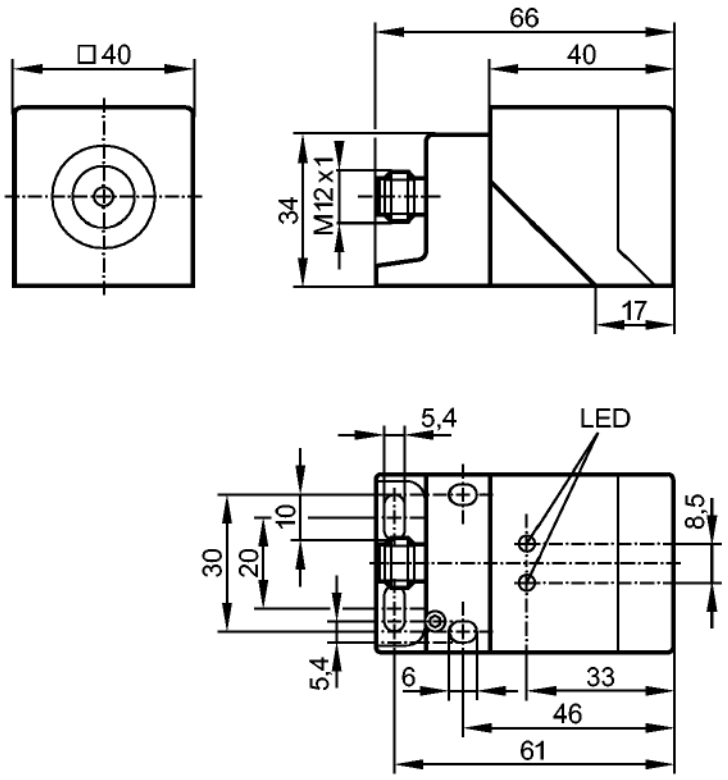




Made in Germany

| | | |
|---|---|---|
| **Product characteristics** | | |
| Fail-safe inductive sensor | | |
| Rectangular, plastics | | |
| M12 connector | | |
| Enable zone 4...20 mm; [nf] non-flush mountable | | |
| Complies with the requirements:<br>EN ISO 13849-1: 2008 category 4 PL e<br>IEC 61508: SIL 3<br>IEC 62061: SILcl 3 | | |
| **Application** | | |
| Type of operation | | continuous operation (maintenance-free) |
| **Electrical data** | | |
| Electrical design | | DC PNP |
| Operating voltage | [V] | 24 DC (19.2...30 DC) |
| Rated insulation voltage | [V] | 30 |
| Current consumption | [mA] | < 30 |
| Protection class | | III |
| Reverse polarity protection | | yes |
| Power-on delay time | [s] | 5 |
| **Outputs** | | |
| Output function | | 2 x OSSD (A1 and A2) |
| Output voltage at 24 V | | compatible with EN 61131-2 inputs type 1, 2, 3 |
| Voltage drop | [V] | < 2.5; (100 mA) |
| Short-circuit protection | | yes |

| | | |
|---|---|---|
| **Range** | | |
| Enable zone | [mm] | 4...20 |
| Safe switching off distance s(ar) | [mm] | 45 |
| **Reaction times** | | |
| Response time to safety request | [ms] | ≤ 50 |
| Response time when approaching the enable zone (enable time) | [ms] | ≤ 200 |
| Risk time (response time for safety -related faults) | [ms] | ≤ 100 |
| **Environment** | | |
| Applications | | Class C to EN 60654-1 weatherproof application |
| Ambient temperature | [°C] | -25...60, for service life ≤ 87600 h<br>10...40, for service life ≤ 175200 h |
| Rate of temperature change | [K/min] | 0.5 |
| Max. relative air humidity | [%] | 5...95, briefly<br>5...70, permanently |
| Air pressure | [kPa] | 80...106 |
| Height above sea level | [m] | ≤ 2000 |
| Ionising radiation | | not permissible |
| Salt spray | | no |
| Protection | | IP 65 / IP 67 |
| **Tests / approvals** | | |
| EMC | | IEC 60947-5-2 |
| Shock resistance | | IEC 60947-5-2 |
| Vibration resistance | | IEC 60947-5-2 |
| **Safety classification** | | |
| Mission time TM | [h] | ≤ 175200, (20 years) |
| Safety-related reliability PFHd | [1/h] | 2.5E-09 |
| MTTFd | [Years] | 1992 |
| DC/CCF/Cat. | | 99 % / 100 % / 4 |
| **Mechanical data** | | |
| Mounting | | non-flush mountable |
| Housing materials | | PPE; diecast zinc |
| Weight | [kg] | 0.355 |
| **Displays / operating elements** | | |
| Display | | LED yellow (signal), LED green (power) |
| **Electrical connection** | | |
| Connection | | M12 connector; Gold-plated contacts |

**Wiring**

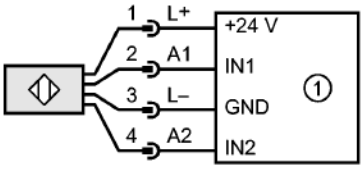


1: Safety-related logic unit

| Remarks | | |
|---|---|---|
| Remarks | | Unless stated otherwise, all data refer to the 60x60x1 mm reference target plate to IEC 60947-5-2 (FE360 = mild steel) over the whole temperature range. |
| Pack quantity | [piece] | 1 |



# 11 Troubleshooting

LED display → 9.4

| Problem | Possible cause | Troubleshooting |
|---|---|---|
| No LED display | No voltage supply | Apply voltage |
| Power LED flashes and sensor does not switch | • Undervoltage<br>• Overvoltage | Correct the voltage<br>(→ 10 Technical data) |
| Sensor does not switch, not even after undamping and redamping | Sensor was brought into the safe state (logic "0"). Cause:<br>• cross fault between both outputs A1 and A2<br>• cross fault between one output (A1 or A2) and the supply voltage<br>• error in the sensor detected | • Switch the operating voltage off and on again<br>• Check wiring and connections<br>• Check external electronics (e.g. PLC)<br>• Remove the cross fault<br>• Replace the unit |



# 12 Maintenance, repair and disposal

If used correctly, no maintenance and repair measures are necessary.
Only the manufacturer is allowed to repair the unit.
After use dispose of the unit in an environmentally friendly way in accordance with the applicable national regulations.

# 13 Approvals / standards

The following standards and directives have been applied:

- 2006/42/EC European Machinery Directive
- 2004/108/EC EMC Directive
- EN ISO 13849-1 PL e (2006) Safety of machinery - Safety-related parts of control systems
- IEC 60947-5-2 (2008) Low-voltage switchgear and controlgear: Control circuit devices and switching elements - Proximity switches
- IEC 61508 (2000)
- IEC 62061 (2005)
- UL 508

# 14 Terms and abbreviations

| | | |
|---|---|---|
| CCF | Common Cause Failure | |
| DC | Diagnostic Coverage | |
| $MTTF_D$ | Mean Time To Dangerous Failure | |
| OSSD | Output Signal Switch Device | |
| PFH ($PFH_D$) | Probability of (dangerous) Failure per Hour | |
| PL | Performance Level | PL to EN ISO 13849-1 |
| SIL | Safety Integrity Level | SIL 1-4 to IEC 61508. The higher the SIL, the lower the probability that a safety function will fail. |
| $SIL_{cl}$ | Safety Integrity $Level_{claim\ limit}$ | According to IEC 62061 |
| $T_M$ | Mission time | Lifetime (= max. service life) |