ifm electronic





Automation for the energy generation of the future.

www.ifm.com

Wind

Biomass

Sun

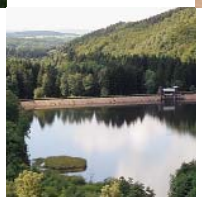

Water

In your element.

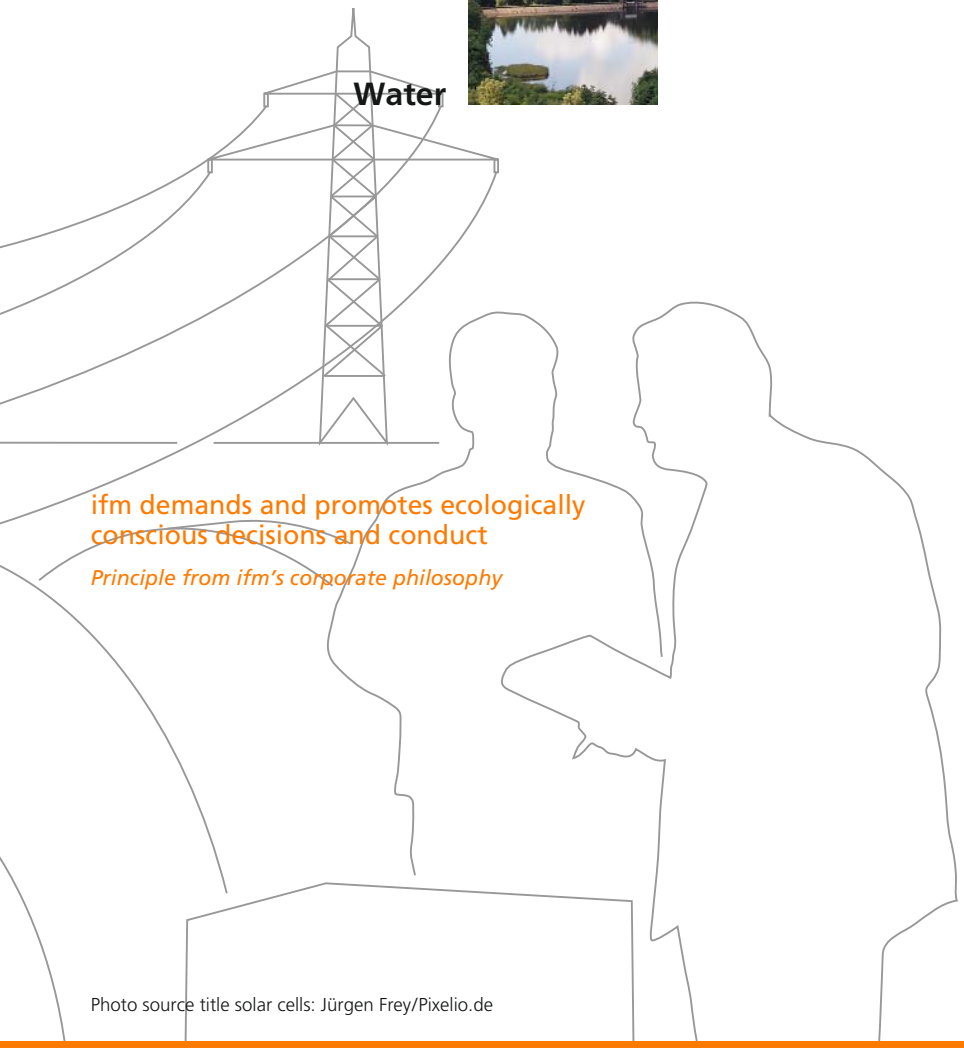

ifm demands and promotes ecologically conscious decisions and conduct

Principle from ifm's corporate philosophy

The name ifm electronic stands for a wide range of different sensors and systems for automation technology. For forty years the family-run company has been researching, developing and producing with the aim of optimising technical processes and conserving resources.

With industry and application know-how, ifm electronic – one of the leading manufacturers of automation technology – successfully provides system solutions that are both innovative and economical. A range of more than 7,800 articles ensures the flexibility required to meet the customers' demands: from an individual sensor and matching accessories to a complete system solution.

Photo source title solar cells: Jürgen Frey/Pixelio.de

Efficient use of renewable energies.

Whether sun, wind, water or biomass – renewable sources of energy are on the advance. Reliability and economic efficiency are the two main requirements of manufacturers and plant operators on complete systems and components.

Due to long-standing experience in the industry and its sectors ifm electronic is a reliable partner at your side. Diverse sensors and systems lead to individual but also robust and reliable solutions. The goal: Ensuring availability and efficiency of your systems. Because quality, innovation and close customer contact are ifm electronic's trademark.

With industry-specific knowledge and global service.

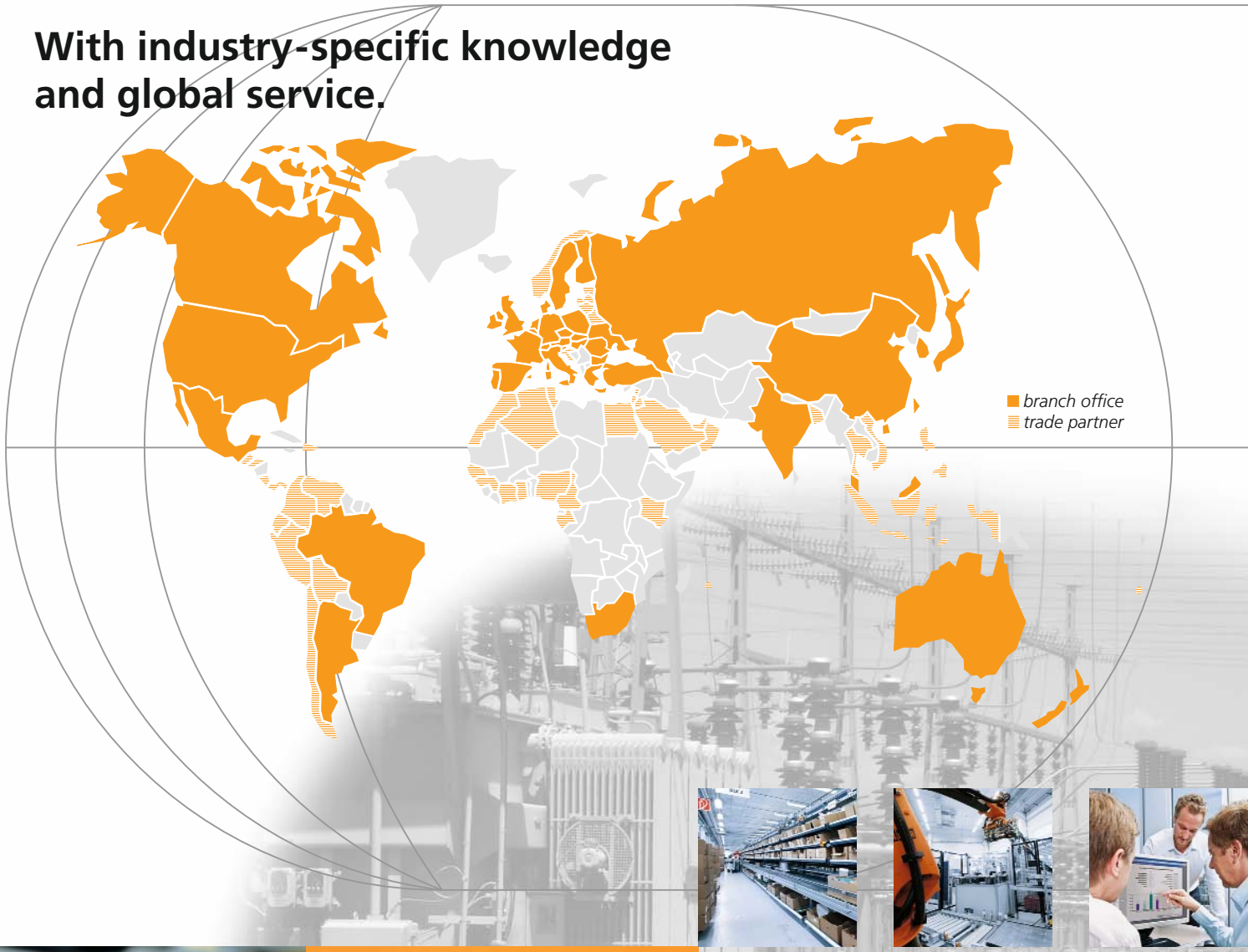

The ifm group of companies is present in over 70 countries with more than 4,300 employees and looks after more than 100,000 customers from the various industries. We take being close to the customer very seriously: Service visits in the event of questions or requests, support for installation or set-up have become a standard for us. Your satisfaction drives us on.

ifm electronic – a reliable partner for implementing your projects.

Wind

Energy in all weathers.

- ✓ Cost-effective co
- ✓ World-wid

Photo source: Fuhrländer Aktiengesellschaft, Liebenscheid

Automation of wind turbines.

To survive on the energy market, wind turbines need to be powerful and efficient. Besides high uptime, suitability for all climatic zones is absolutely necessary. Plant operators have special demands on the components installed to ensure that they stand up to different environmental conditions. Besides high temperature fluctuations they include shock and vibration stress. The sensors and systems from ifm electronic are optimised for these different demands on performance – at an excellent price / performance ratio. Diverse approvals certify their reliable operation. Test us!

Sensors and systems for wind turbines.

ondition-based maintenance.

- ✓ Sensors and systems designed for high temperature fluctuation.

e availability of the units.

- ✓ For any environmental condition.
- ✓ Global service with competent support.
- ✓ Many years of experience and comprehensive industry and application know-how.
- ✓ All relevant approvals.




Safe and efficient wind energy generation.

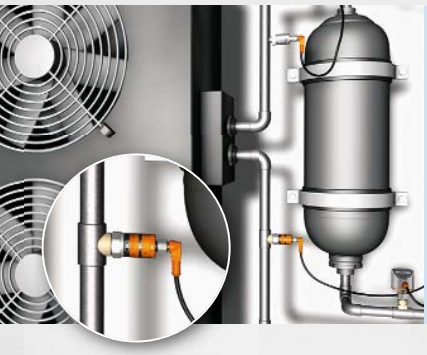

Pressure, temperature and flow sensors from ifm electronic detect the required technical data of the generator's liquid-based cooling system. In this application the sensors are distinguished by easy setting, robust design and an optimum price / performance ratio.

1. Monitoring cooling systems

The rotational speed of the wind turbine is controlled via the position of the rotor blades. Robust, inductive sensors of the IGM series can be used for the reliable detection of the end positions. In addition, tamper-proof, fail-safe inductive sensors of the GI series monitor the maximum end position for operator and plant safety.

2. Safe end position of the rotor blades

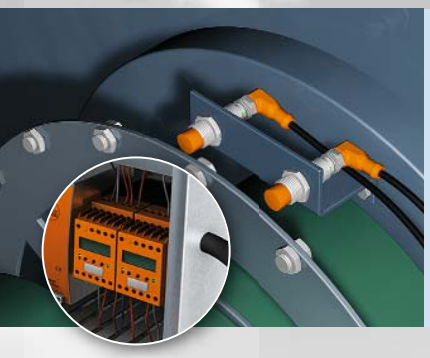

To avoid overspeed of the main actuator shaft speed monitors of type DD and inductive sensors of the IM or IGM series monitor the speed. Screw heads passing by dampen the inductive sensors. The speed monitor ensures reliable switch-off within the safety chain.

3. Rotational speed actuator shaft and generator

The LI level sensor detects all liquids collecting on the nacelle floor due to leakage. The sensor detects not only oils but also water, aqueous media and water-based coolants. Furthermore, the switching output can be individually adapted to the application.

4. Leakage monitoring nacelle floor

High-resolution encoder signals ensure optimum orientation and position detection of the nacelle, even after power failure.
ifm supplies absolute encoders of the RM series with CAN interface for this task. Furthermore, other encoders with SSI and Profibus interface are available.

5. Position nacelle

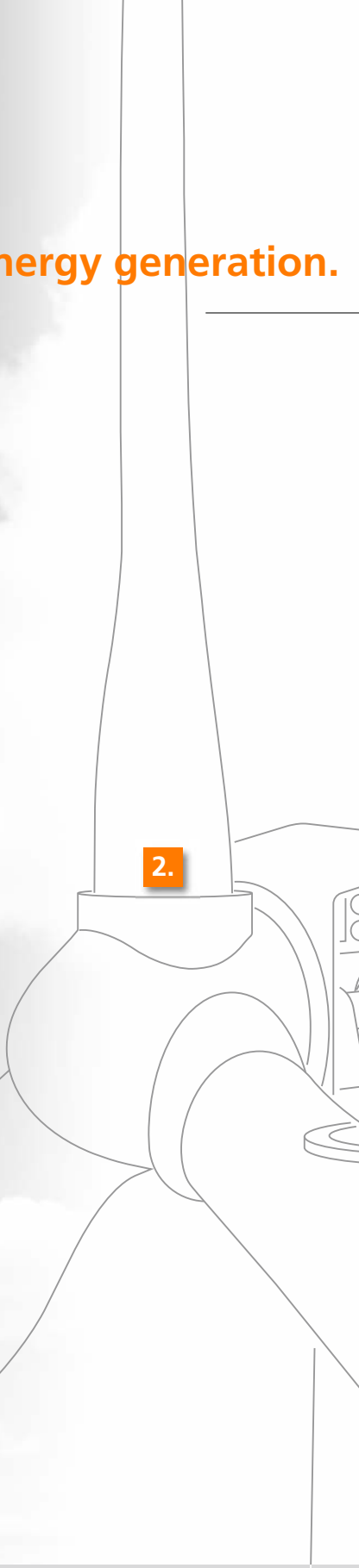

Pressure
hydraulic system

6.

**The hydraulic system is an important central system in a number of wind turbines.
With too low an oil pressure, for example, the rotor blade pitch or the hydraulic brake system can no longer work reliably. In this case, electronic pressure sensors from ifm give alarm signals to the controller.**

Level lubricant system

7.

Wind turbines must function absolutely reliably and must in no case fail due to an avoidable fault, e.g. insufficient lubrication. To detect the minimum level on the metal ring of the membrane noise-immune inductive sensors of the IFM series are used.

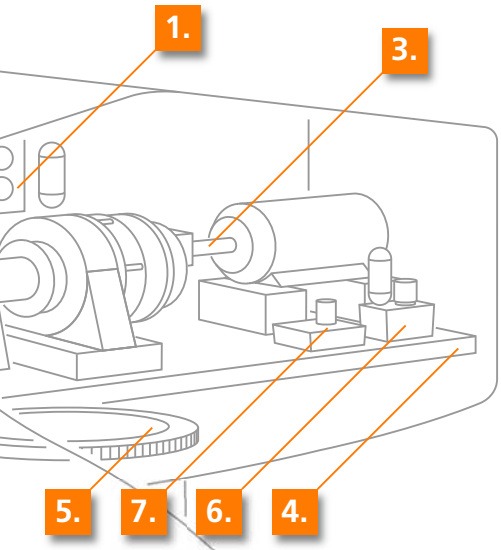

Flow sensors and transmitters to monitor gaseous and liquid media.

Pressure sensors and transmitters with ceramic-capacitive or stainless steel measuring cell for various processes.

Temperature sensors and transmitters, as well as cable and probe sensors for reliable monitoring of the application.

Speed monitors for monitoring rotating and linear movements for overspeed.

24-V switched-mode power supplies with single or three-phase primary voltage with wide-range inputs for global use.

High-quality, ingress-resistant and vibration-protected connection technology for various applications with different protection ratings.

CMS condition monitoring systems in wind turbines.

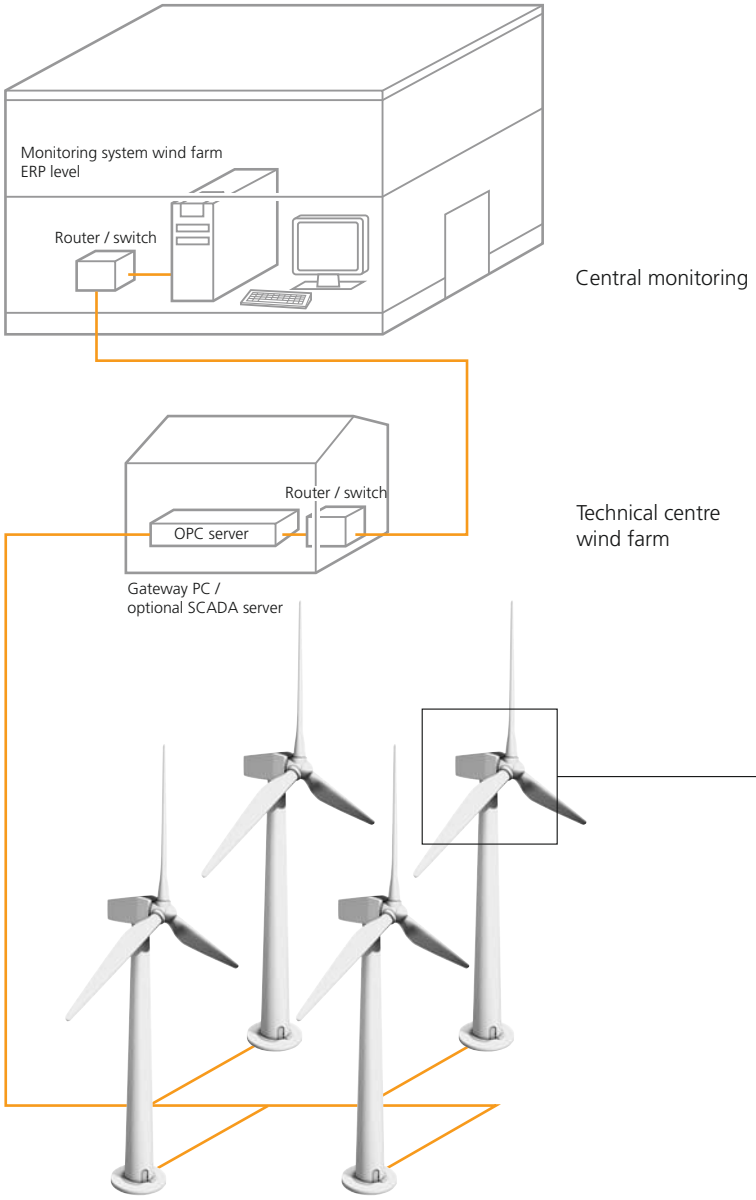

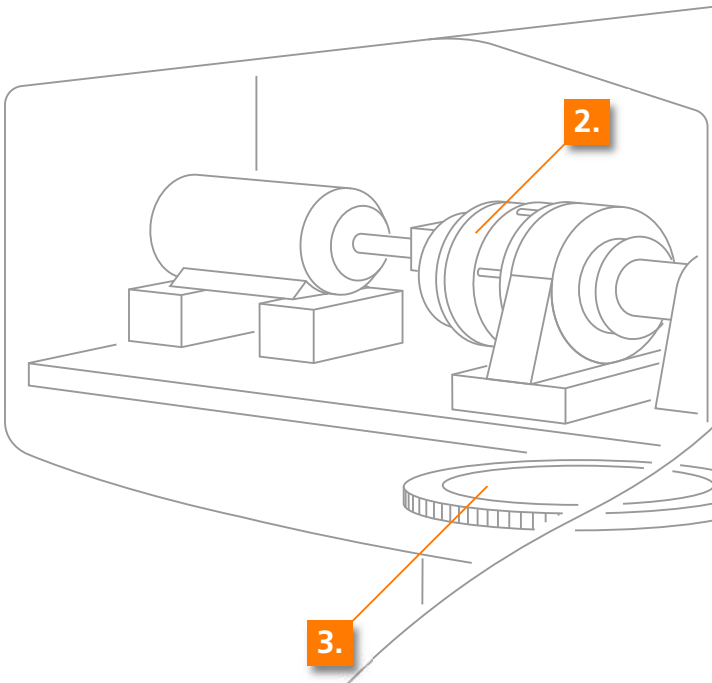

1. 4.

Higher and higher demands on profitability at lowest possible service cost are becoming more and more important for condition-based maintenance. Using ifm electronic's Condition Monitoring System, plant operators and manufacturers get a tailor-made entry-level or all-in-one solution at the best price/performance ratio. From permanent monitoring of individual plant states by sensors to consistent documentation in the control system of the wind power farm: The software and hardware of the ifm system provide reliable information about the wear of individual components for predictive maintenance. The transparency of the data allows comparison of the data of individual plants.

Rotor blades

1. **The VSA vibration sensor and the VSE diagnostic electronics from the efector *octavis* family monitor the vibration of the rotor blades. One sensor on each wing senses the vibration of a rotor blade. Fatigue, crack formation and damage e.g. caused by a strike of lightning can thus be detected.**

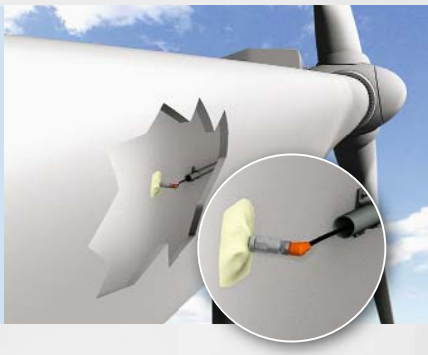

Power train

2. **Up to eight vibration sensors of type VSA and two diagnostic electronics of type VSE monitor the power train consisting of generator, gear and main rotor bearing. The efector *octavis* diagnostic system diagnoses the current states of bearings and gears taking into account the load and rotational speed information.**

Yaw of the nacelle (azimuth)

3. **Monitoring the slide bearings by sensing, evaluation and remote transmission of an external current measurement by means of the VSE diagnostic electronics.**

Tower vibration

4. **The efector *octavis* diagnostic system monitors the tower vibration for torsion, bending, crack formation, fatigue and wagging vibration.**

VT vibration transmitter to monitor overall vibration by means of 2-wire technology. Veff according to ISO 10816.

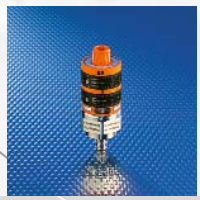

VK vibration monitor with switch and transmitter function to monitor general machine vibration.

VE compact vibration diagnostic unit for permanent condition monitoring with integrated history function.

VSE diagnostic electronics as control cabinet module for vibration monitoring of up to four measuring points.

VSA vibration sensors with full self-test capability for the connection to the VSE diagnostic electronics.

Green energy.

Easy handling of sensors and

Stainless steel units for direct contact with the medium. ✓

World-wide availability of the units. ✓

Optimum price / performance ratio. ✓

Flush fluid sensors to avoid deposits. ✓

ATEX approvals for the categories 1 to 3. ✓

10 years of experience in the field of biogas plants. ✓

Automation of biogas plants.

The alpha and omega of a biogas plant is its high capacity utilisation which is based on reliable operation. Installed automation technology must not only score due to easy handling but also due to high resistance and fast availability in case of replacement. The plant manufacturer and also the plant operator have a competent partner at their side with ifm electronic. ifm sensors are known for their long life and reliability – even with direct contact to the medium. Unique customer service: Expert staff in technology and marketing support you with planning or retro-fitting your biogas plant. Benefit from our 10-year experience!

Sensors and systems for biogas plants.

l systems.

Photo source: PlanET Biogastechnik GmbH, Vreden

Efficient energy generation from biomass.

Pressure sensors from ifm are used to avoid overpressure in substrate pipes. The flush pressure measuring cell of ceramics protects against plug formation. Furthermore, they are extremely resistant to abrasion by rough media in the substrate.

1. Pressure substrate pipes

Optical distance sensors of the O1D series measure the level of the substrate in the supply tank without contact. Due to the long ranges of the lens, soiling can be excluded to a large extent. Another advantage: easy parameter setting and installation.

2. Level supply tanks for fermenters

There has to be a constant temperature in the fermenter so that the fermenting process takes place. The TR temperature sensor detects the medium temperature of the substrate and provides an analogue signal to the controller. Thanks to individual scaling the unit can be optimally integrated in the application.

3. Temperature fermenters

The hydraulic feeder system demands high overload protection and at the same time stable measured value detection from the electronic pressure transmitters. The measuring range can be scaled from 0 to 250 bars. The transmitters score with their efficient structure and an excellent price / performance ratio.

4. Hydraulic pressure feeder system

The two-point control of the wear-free PK pressure sensor monitors the hydraulic pressure. The user can easily set the set and reset points via two radial setting rings. The mechanical lock and the optional protective cover prevent unintended programming.

5. Hydraulic pressure feeder system

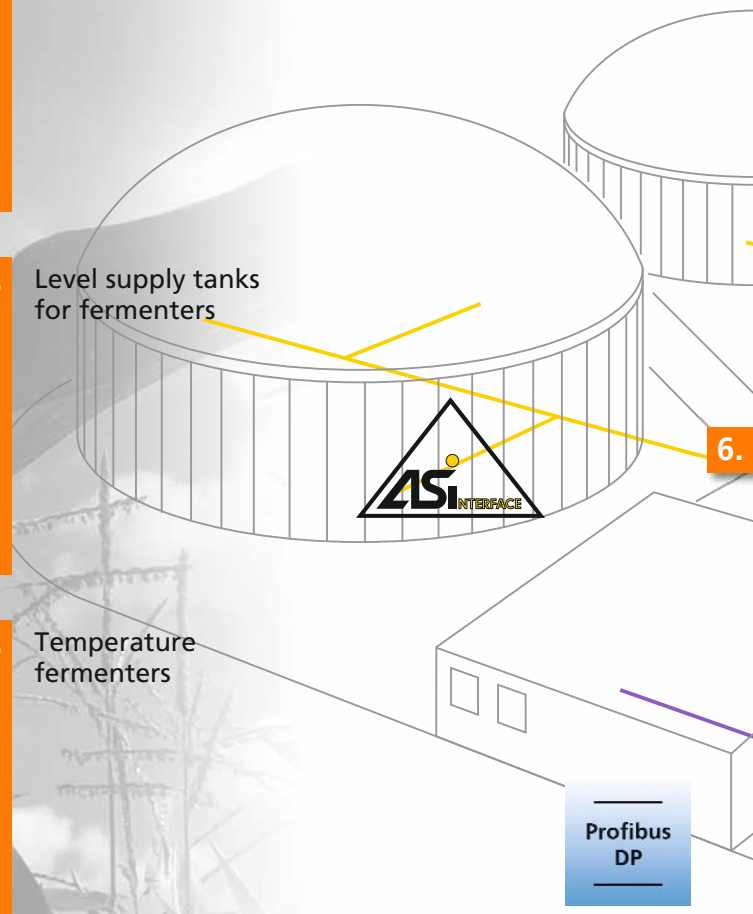

AS-Interface as an intelligent wiring control system

6. **AS-i optimises the decentralised connection of sensors and actuators in the plant. There is savings potential for example with the AS-i AirBox with regard to minimising piping and installation complexity and to the considerable reduction of the compressed air consumption. Furthermore, the higher-level bus systems such as Profibus DP are technically and economically supplemented.**

Monitoring end positions slide valves

7. **Inductive sensors of the IG series are used for position feedback of the slides. Their standardised M18 thread ensures easy fixing on common slides. The IP 67, IP 68 and IP 69 K protection ratings guarantee high ingress-resistance even in adverse environmental conditions.**

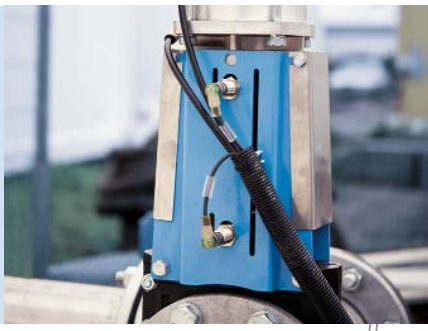

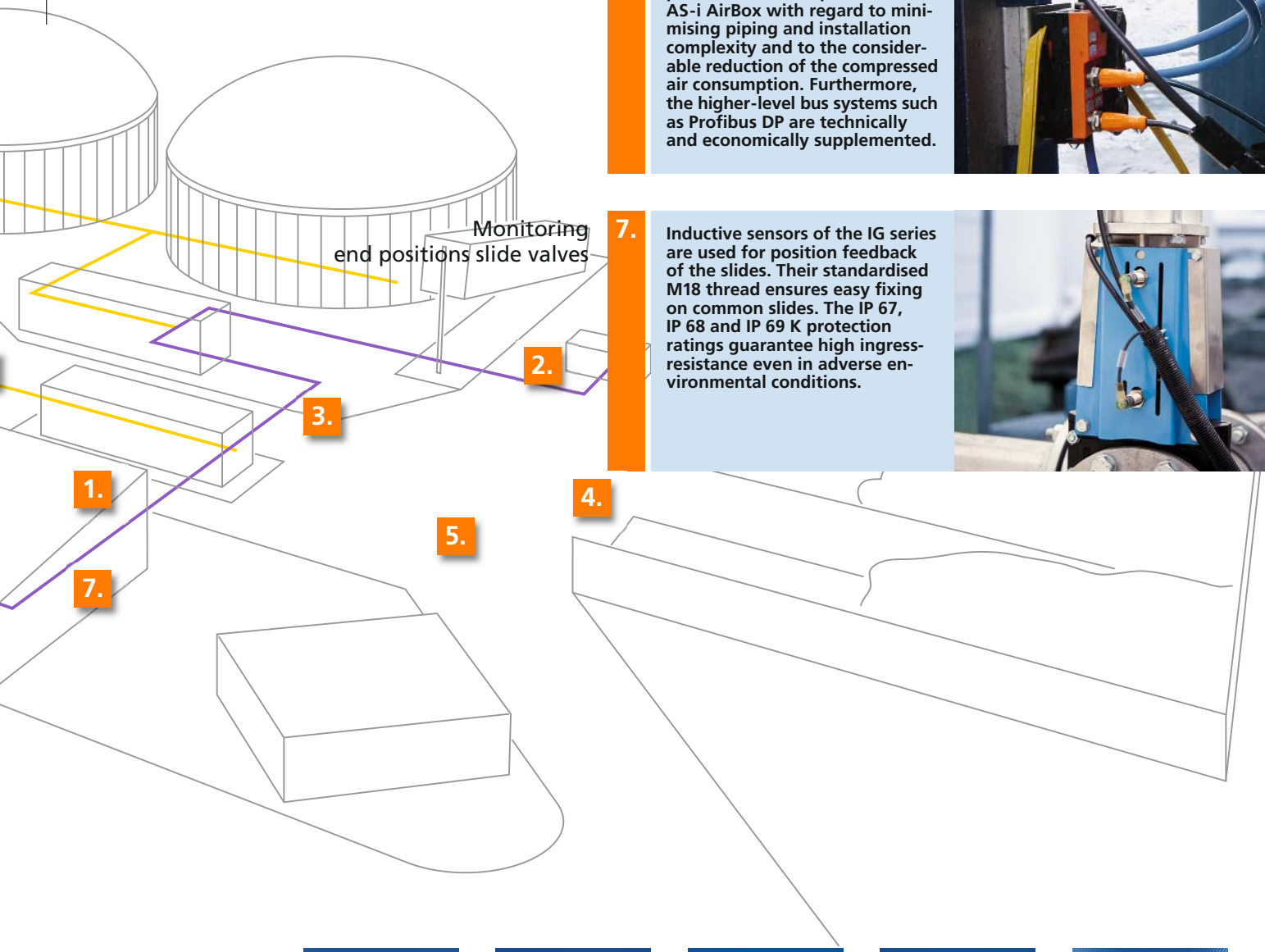

Inductive sensors with high EMC resistance for position detection – they detect metals without contact and also without wear.

Capacitive sensors monitor the level of materials with different dielectric constants.

AS-Interface for intelligent decentralised networking of sensors and actuators up to the control level.

24-V switched-mode power supplies with single or three-phase primary voltage with wide-range inputs for global use.

High-quality, ingress-resistant and vibration-protected connection technology for various applications with different protection ratings.

Swimming with the current.

Direct expert support

Support for set-up.

Easy menu navigation of the configurable units. ✓

Intuitive handling. ✓

High quality standards for sensors and systems. ✓

World-wide service. ✓

Condition-based maintenance for rolling element bearing monitoring. ✓

Automation of hydroelectric power plants.

Each hydroelectric power plant is individually designed, has its own demands on the technology used. ifm electronic is a reliable and competent partner at your side also in this field: Whether for the selection of components, the support on site or during set-up.
A comprehensive range of products is ready to solve monitoring tasks both reliably and at low cost: from position monitoring to flow monitoring and condition-based maintenance of generators. The ifm products will convince you with their quality, long life, intuitive handling and easy menu navigation. See for yourself!

Sensors and systems for hydroelectric power stations.

on site. ✓

✓

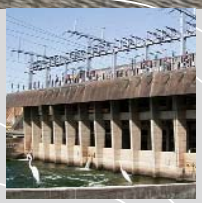

Efficient energy generation from hydropower.

The water infeed and thus the rotational speed of the turbine are controlled via the adjustment of the guide vanes.
A maximum angle of aperture must not be exceeded. Inductive sensors of type IE reliably monitor the end positions of the guide vanes.

1. End position guide vanes

Durable slide bearings are used in the turbines. To monitor the viscosity, probe sensors of type TT detect the temperature of the lubricating film. Thanks to the 7-segment display the temperature can be read directly on site and transferred to the higher-level controller via analogue outputs.

2. Temperature turbine bearing

VSA vibration sensors and VSE diagnostic electronics monitor the rolling element bearings of the turbine. Unbalance and bearing damage can be detected at an early stage and rectified. Unplanned standstills are thus a matter of the past.

3. Vibration diagnosis rolling element bearing turbine

The hydraulic pressure of the guide vane adjustment is continuously measured by and displayed on pressure sensors of type PN and transmitted to the controller via a 4...20 mA analogue signal. The sensor also scores with high pressure resistance and drift-free operation up to 100 million pressure cycles.

4. Pressure hydraulic power pack

The submersible pressure transmitters of the PS3 series are perfectly suited for continuous measurement of the water level. The standard transmitter with 2-wire technology is designed for the robust use in sewage treatment plants, for example. The difference in height between the upper and lower reservoir, the height of fall, can be exactly measured and the signal be further processed to control the weir.

5. Level measurement upper and lower reservoir

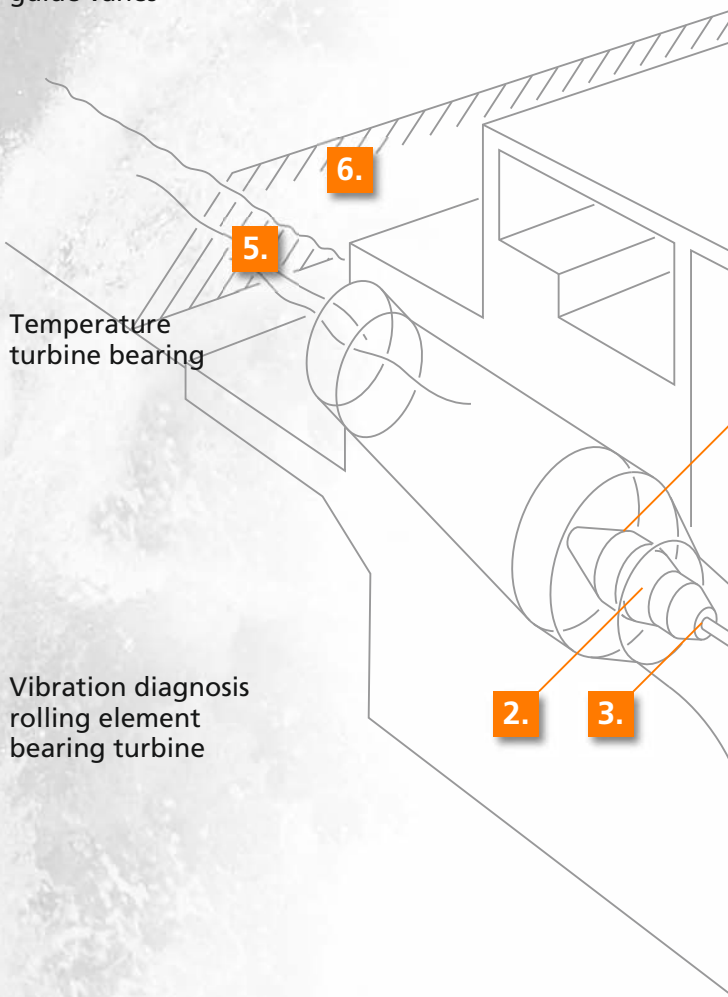

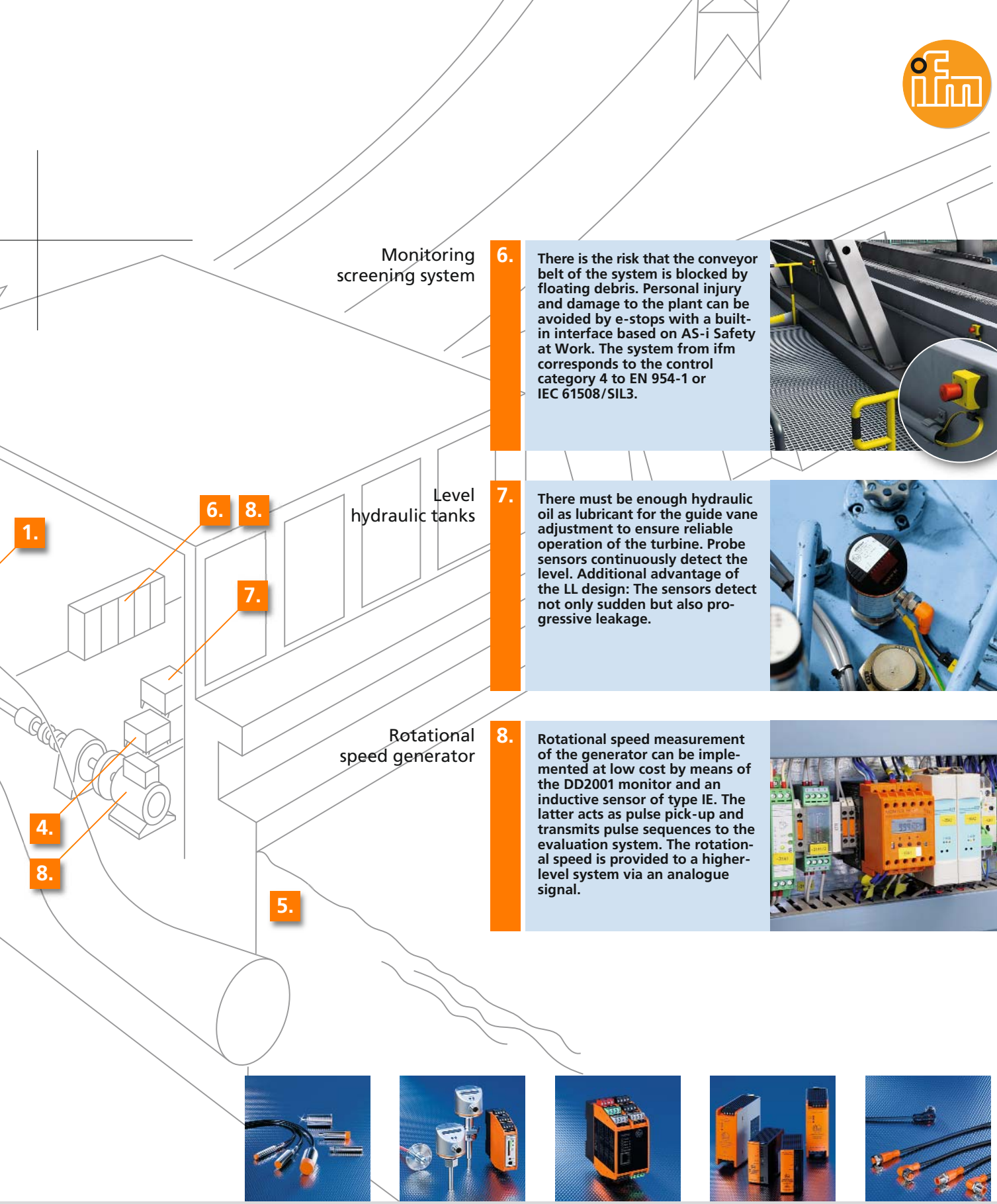

Monitoring screening system

6. There is the risk that the conveyor belt of the system is blocked by floating debris. Personal injury and damage to the plant can be avoided by e-stops with a built-in interface based on AS-i Safety at Work. The system from ifm corresponds to the control category 4 to EN 954-1 or IEC 61508/SIL3.

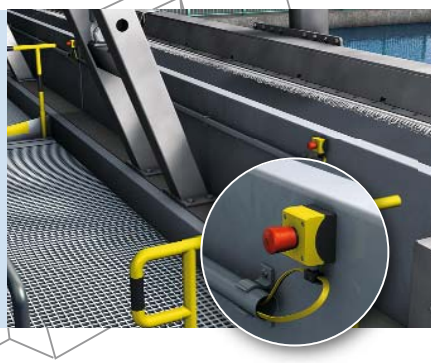

Level hydraulic tanks

7. There must be enough hydraulic oil as lubricant for the guide vane adjustment to ensure reliable operation of the turbine. Probe sensors continuously detect the level. Additional advantage of the LL design: The sensors detect not only sudden but also progressive leakage.

Rotational speed generator

8. Rotational speed measurement of the generator can be implemented at low cost by means of the DD2001 monitor and an inductive sensor of type IE. The latter acts as pulse pick-up and transmits pulse sequences to the evaluation system. The rotational speed is provided to a higher-level system via an analogue signal.

Inductive sensors with high EMC resistance for position detection – they detect metals without contact and also without wear.

Flow sensors and transmitters to monitor gaseous and liquid media.

Diagnostic electronics for the control cabinet to evaluate vibration data for machine diagnosis.

24-V switched-mode power supplies with single or three-phase primary voltage with wide-range inputs for global use.

High-quality, ingress-resistant and vibration-protected connection technology for various applications with different protection ratings.

On the sunny side.

World-wide availability of the units. ✓

For different climatic zones. ✓

Innovative application solutions. ✓

Support for set-up. ✓

Robust and noise-immune sensors for outdoor applications. ✓

Direct expert support on site. ✓

High reliability and quality of the sensors ans systems. ✓

Photo source: Ferrostaal/Maier-Jantzen

Automation of solar tracking systems.

The solar panels of a photovoltaic system or the parabolic reflectors of a solar thermal system are adjusted for maximum energy yield. UV rays, sand, temperature fluctuations and humidity affect the sensors of the tracking systems. ifm electronic is known for robust sensors for outdoor applications. Among them are various sensors for position detection. Once adjusted, they are maintenance and wear free. The sensors from ifm stand out with their reliability, long life and quality.
Join ifm on the sunny side!

Sensors and systems for solar tracking systems.

Position tracking system

1. **Encoders detect the limits of travel of the solar tracking system. Each angular position is assigned a coded numerical value in the absolute encoders of types RM and RN. Advantage: In the event of a power failure the absolute value saves a "reference procedure".**

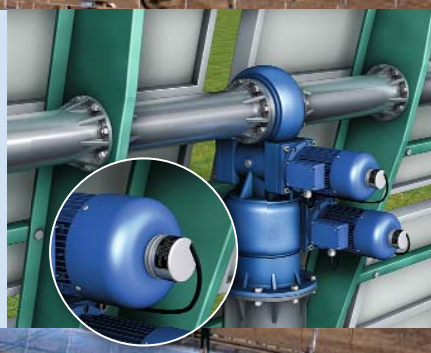

Detection snow load

2. **To protect the solar panels against too heavy snow loads, capacitive sensors of types KI and KQ are used. They are installed behind glass and detect the presence of snow. When the switch point is reached, a signal is transmitted to the controller which in turn activates a thawing system and the solar panel is driven into a vertical position.**

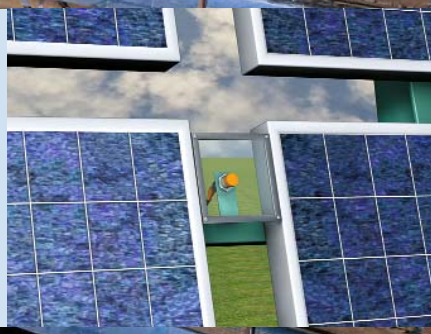

Inductive sensors with high EMC resistance for position detection – they detect metals without contact and also without wear.

Receive an "absolute" numerical value for each angular position with absolute encoders.

Analogue inclination sensors and inclination sensors with a built-in interface of high operational reliability for continuous position detection under extreme operating conditions.

Modular control system ecomatmobile Basic – consisting of BasicRelay, BasicController and BasicDisplay.

Capacitive sensors detect materials with different dielectric constants.

High-quality, ingress-resistant and vibration-protected connection technology for various applications with different protection ratings.

Visit our website:

www.ifm.com

Over 70 locations worldwide –
at a glance at **www.ifm.com**

ifm electronic gmbh
Friedrichstraße 1
45128 Essen
Tel. +49 / 201 / 24 22-0
Fax +49 / 201 / 24 22-1200
E-mail info@ifm.com

ifm electronic – close to you!

Overview
ifm product range:

Position sensors

Sensors for motion control

Industrial imaging

Safety technology

Process sensors

Industrial communication

Identification systems

Condition monitoring systems

Systems for mobile machines

Connection technology

Accessories

ifm article no. 7511487 · We reserve the right to make technical alterations without prior notice. · Printed in Germany on non-chlorine bleached paper. 05/12