Case Study

Plant FCA Verrone, Italy

World Class Manufacturing

CBM
Condition Based Maintenance

- Monitoring in real time -

ifm electronic

Date: **December 1, 2015**
Version: **1**

1. Document change history

Vers.	Date:	Type of change	Page
1	01 Dec 2015	First version	All

2. Contacts

Engineering and plant support for FCA Verrone, Italy

ifm electronic s.r.l.
Centro Direzionale Colleoni
Via Paracelso n° 18
I-20041 Aggrate Brianza (MI)

Andrea Bedetti
andrea.bedetti@ifm.com
+39 348 8292003

Central contact for projects with FCA Verrone

Global Project Management

ifm electronic gmbh
Friedrichstrasse 1
D-45128 Essen

Klaus-Peter Prause
klaus-peter.prause@ifm.com
+49 151 14817604

3. What`s behind

Fiat Verrone in Italy is producing gearboxes / transmissions.

This example shows which kind of datas are evaluated in the different machines and processes and how they are collected.

In this study we have a look at the following operations:

OP.310 - Groove grinding

OP.320 - Contour grinding

OP.320 - Contour grinding

OP.330 - Teeth grinding

OP.350 - Shot-peening

OP.340 / 360 - Washing

Indication

Sensors control vibrations of all axes of rotation.

All linear axes placed directly involved in parts production.

All pump high pressure size of more than 5 kW.

To be installed on machine tools:
Pressure sensors, flow, temperature with analog out 4-20mA scalable.

Can be connected to VSE100 control units;
VSE100 interconnection via Industrial Ethernet switch Cisco IE3000.

Through a cycle " empty " dedicated to the machine tool,
Once per shift will be performed vibration measurements by sensors installed.

4. Overview – machine types / data evaluation and -collection

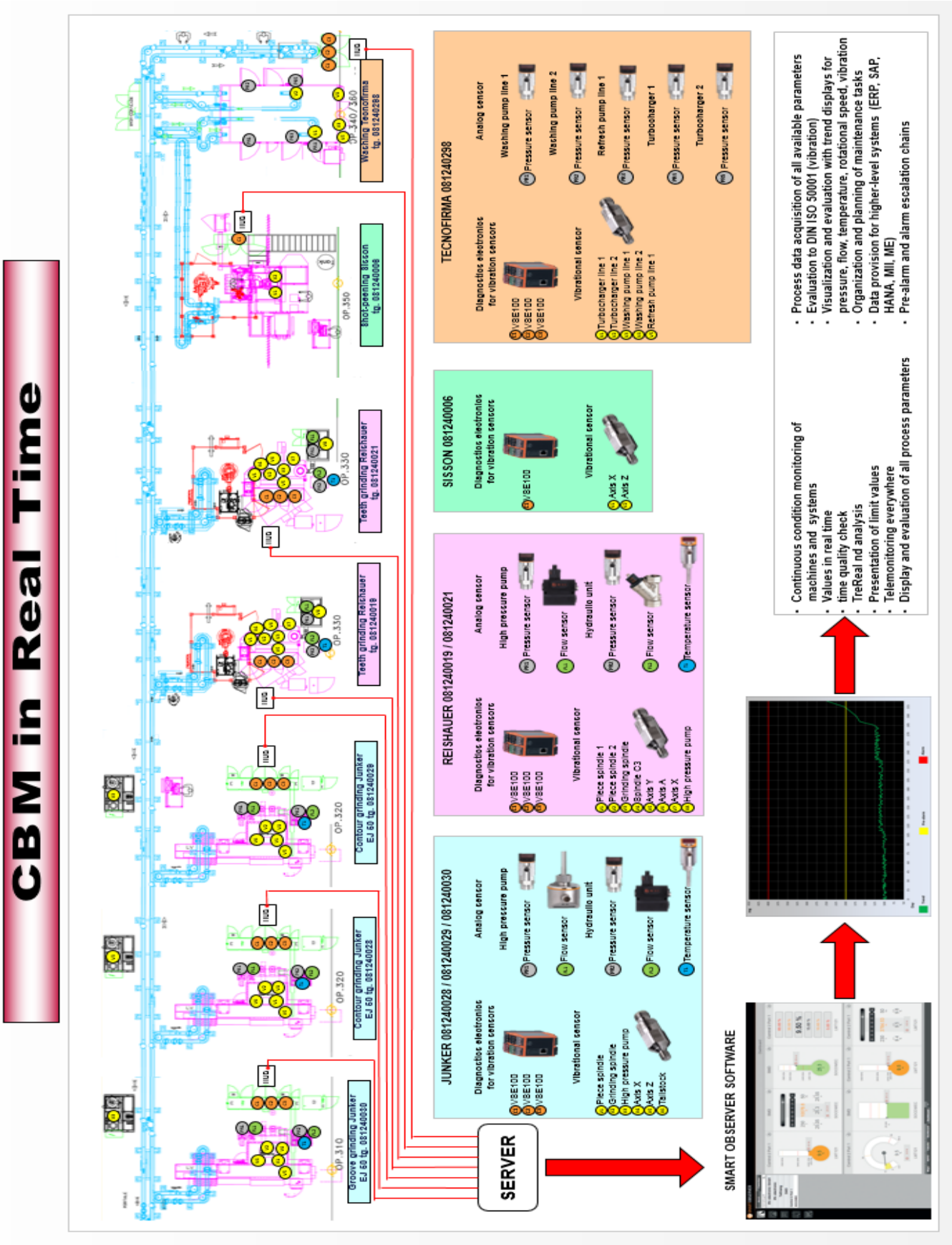

5. OP.310 / OP.320 Groove and contour grinding

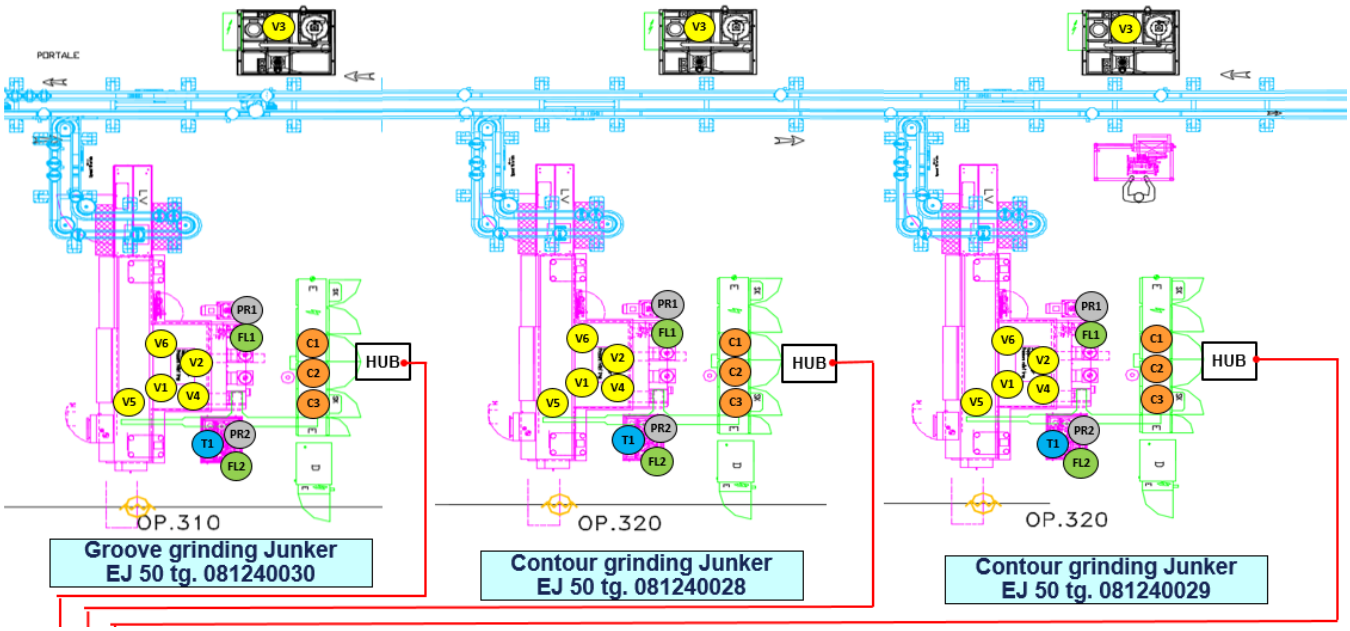

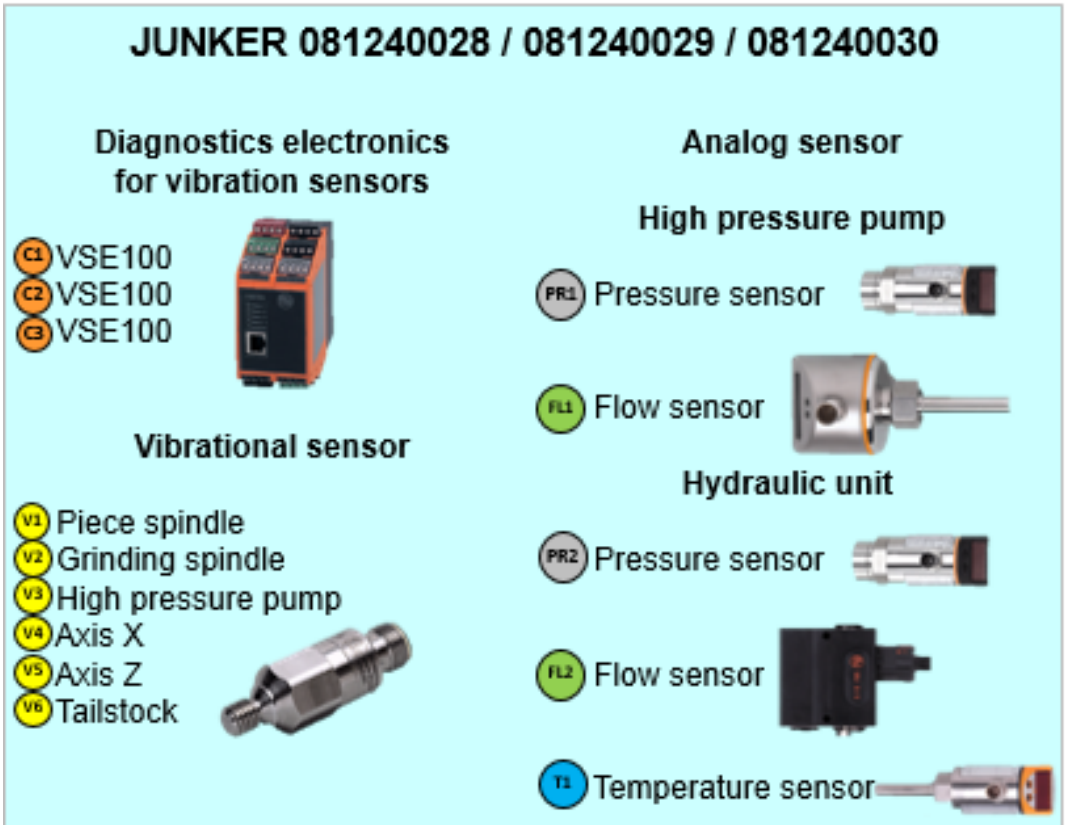

6. OP.330 Teeth grinding

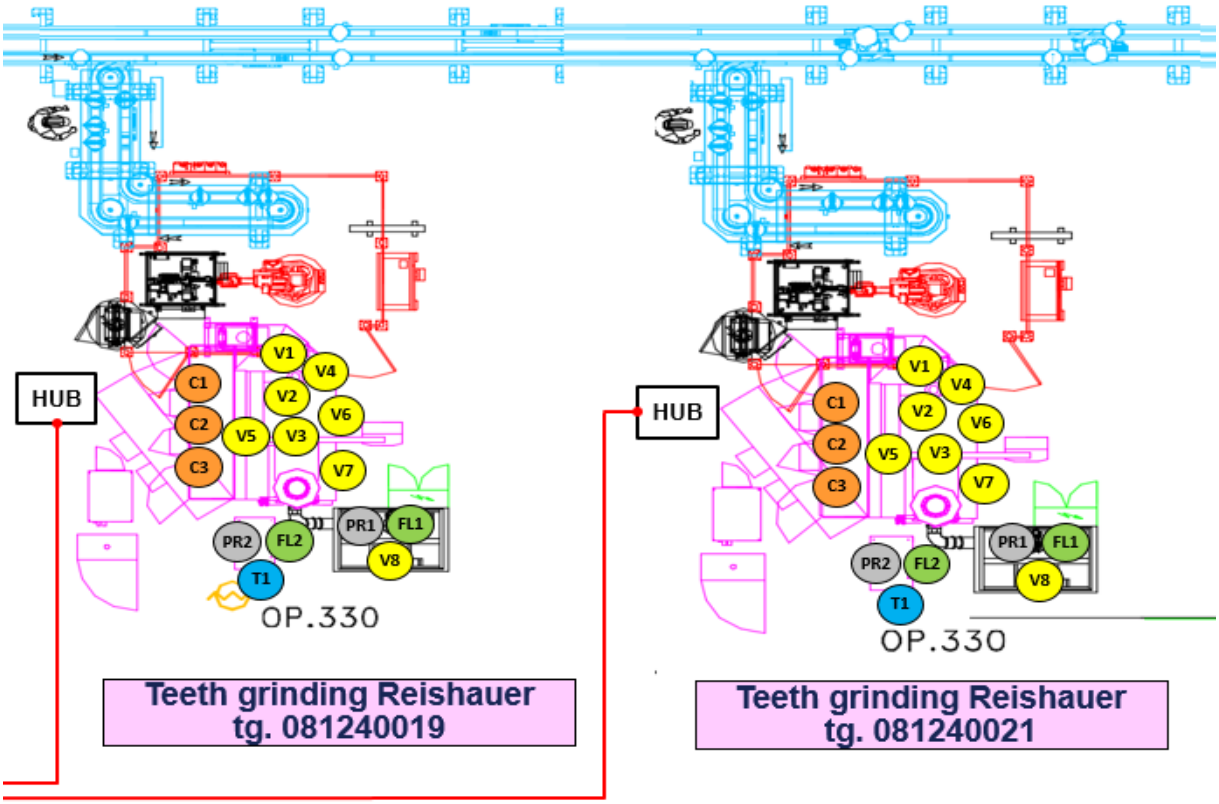

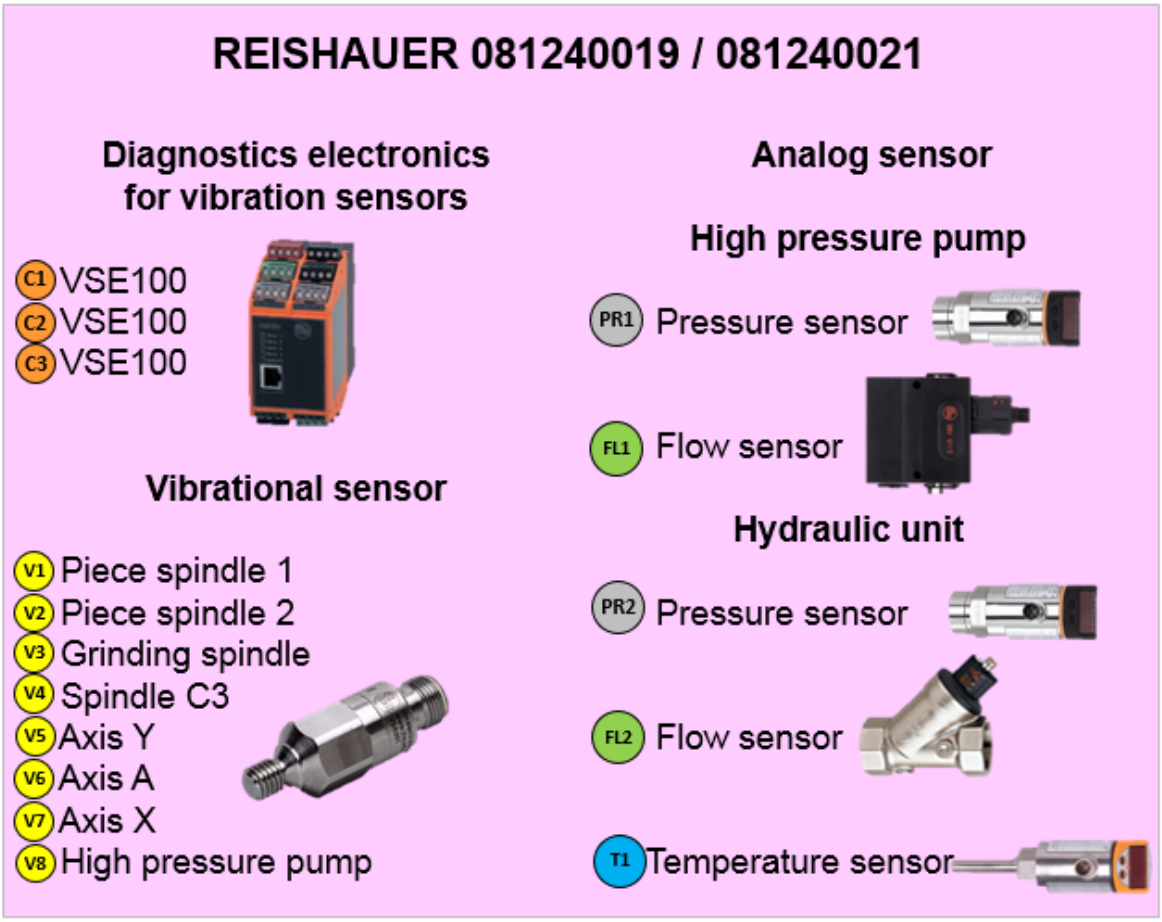

7. OP.350 Shot-peening

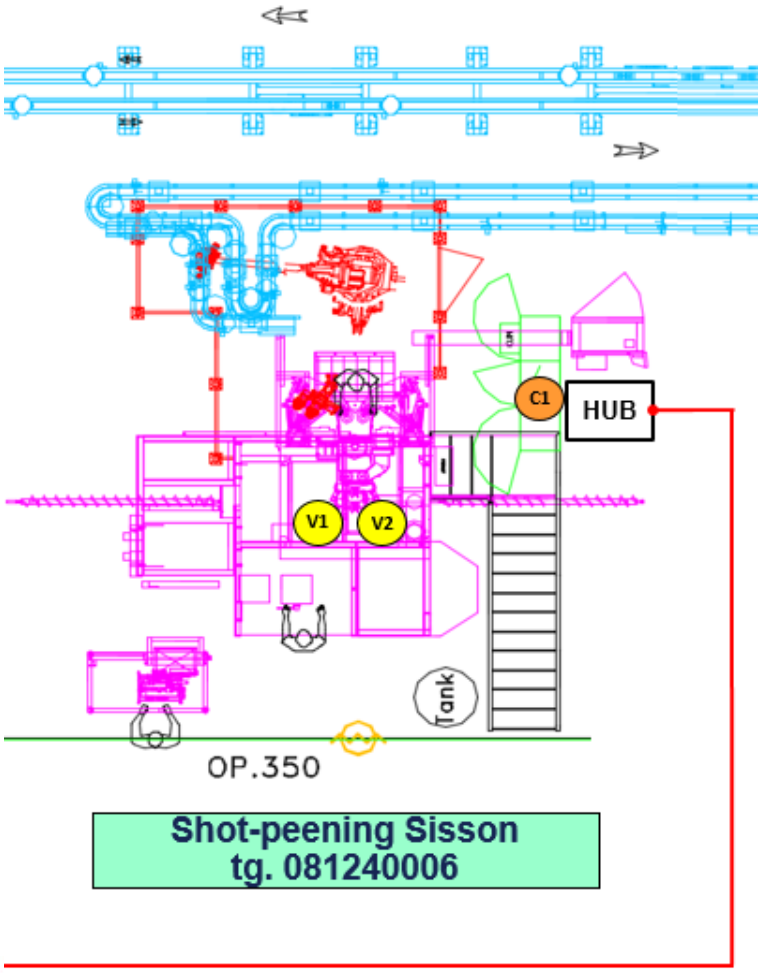

8. OP.340 / 360 Washing

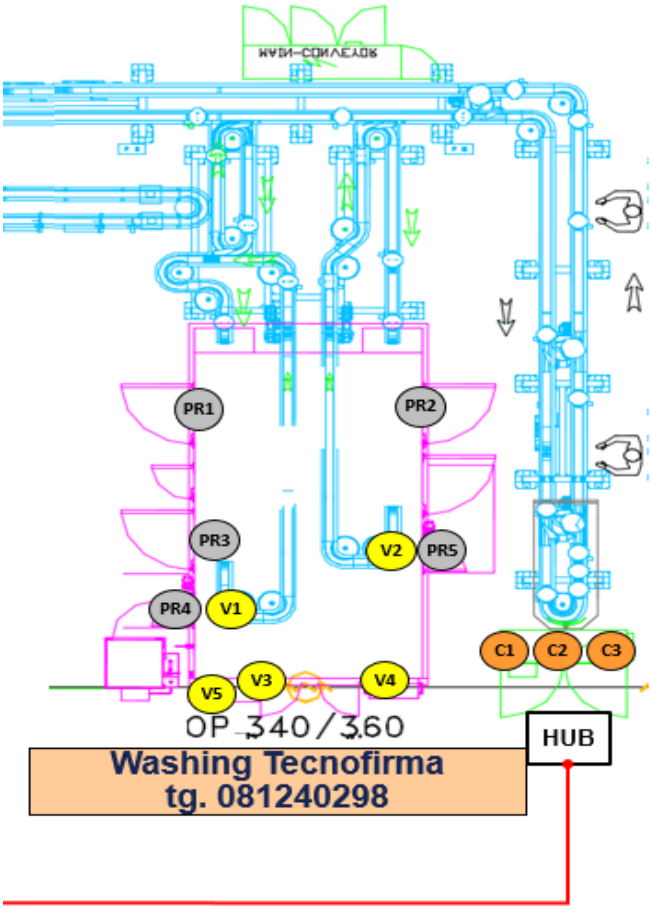

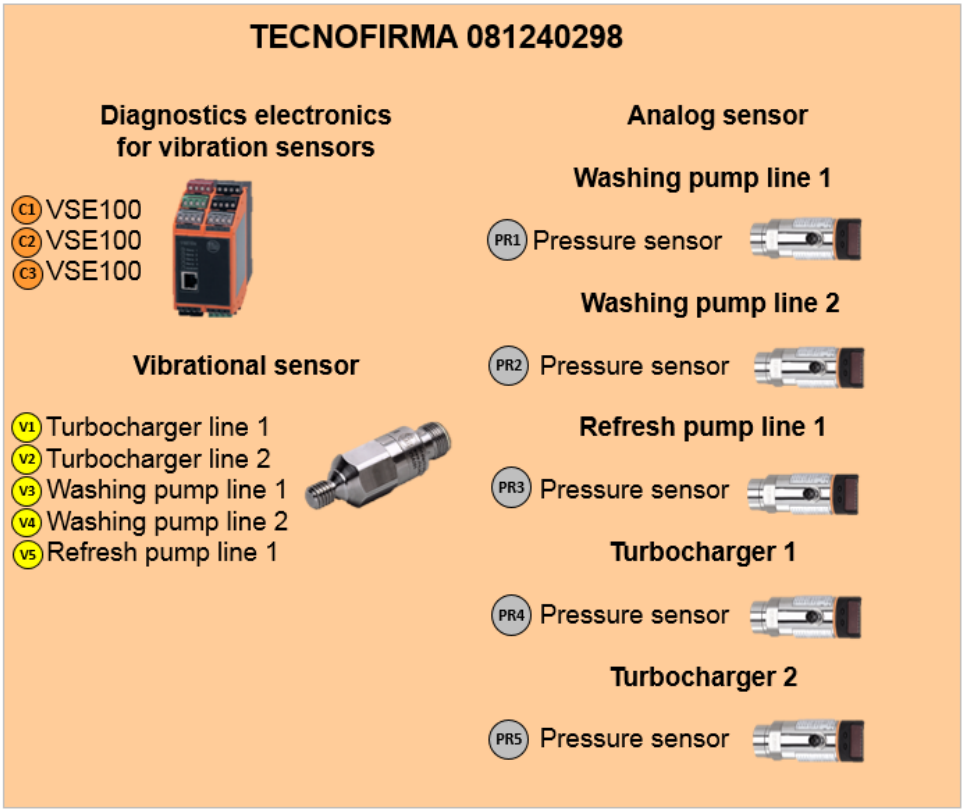

9. Data collection / SMART Obsverver

Data collection via Hubs

9. Data collection / SMART Obrserver

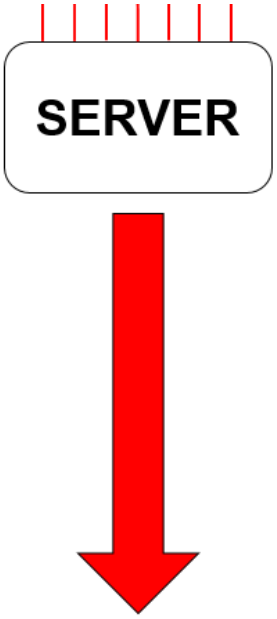

SMART OBSERVER SOFTWARE

10. Visualization

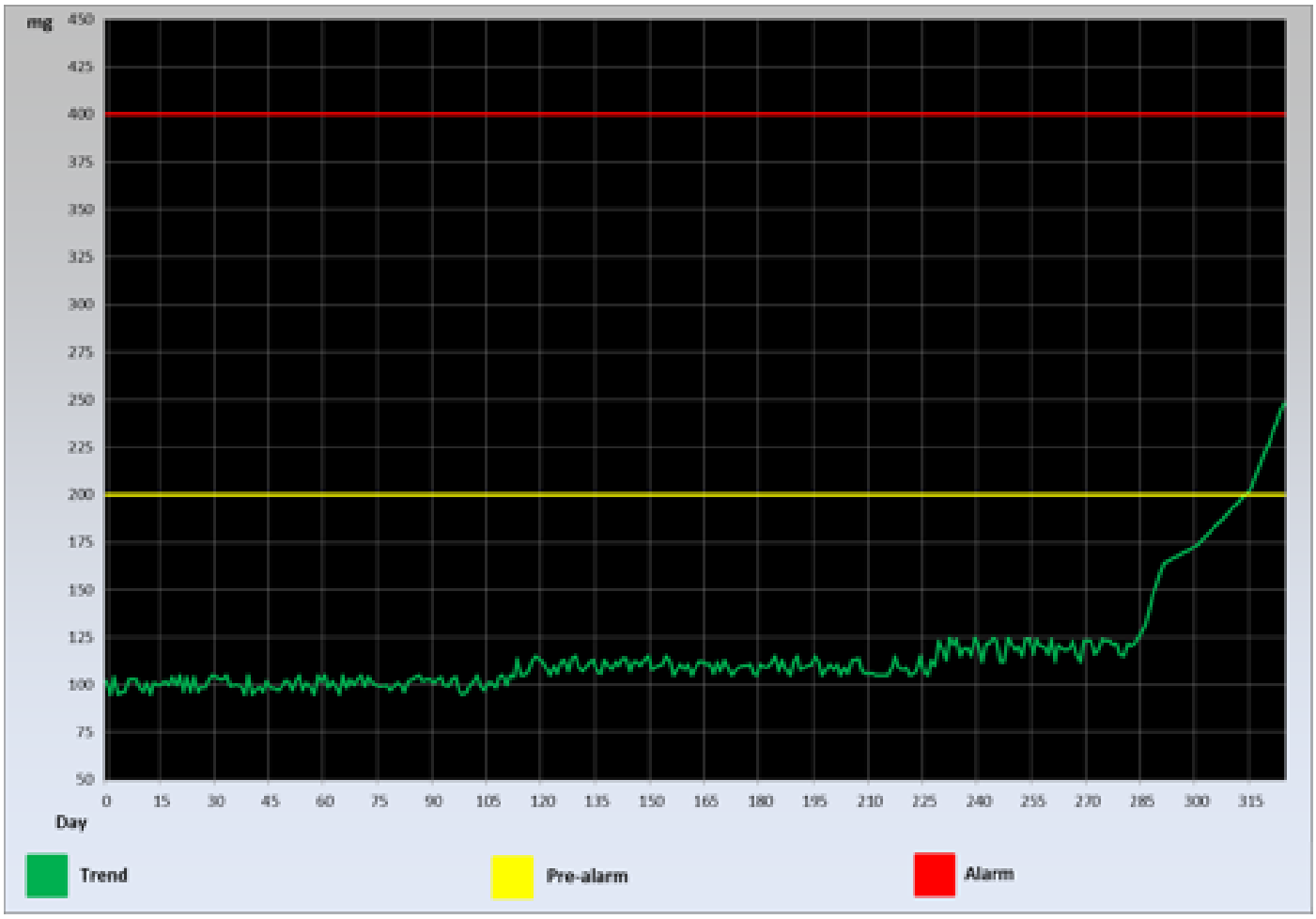

11. Objectives of the Condition Based Monitoring

- **Continuous condition monitoring of machines and systems**
- **Values in real time**
- **Time quality check**
- **TreReal nd analysis**
- **Presentation of limit values**
- **Telemonitoring everywhere**
- **Display and evaluation of all process parameters**
- **Process data acquisition of all available parameters**
- **Evaluation to DIN ISO 50001 (vibration)**
- **Visualization and evaluation with trend displays for pressure, flow, temperature, rotational speed, vibration**
- **Organization and planning of maintenance tasks**
- **Data provision for higher-level systems (ERP, SAP, HANA, MII, ME)**
- **Pre-alarm and alarm escalation chains**